PART NO.	DESCRIPTION			
250203 -01	SHIPPING ASSY.	8250 LP		UL
-02				CSA
-03				JIS
-04				VDE
250203 -05	SHIPPING ASSY.	8250 LP		ESI

A	/ /	PRODUCTION RELEASE	T.T.
B	5/26/83	REVISED PER ECO 830233	
C	7/7/83	REVISED PER ECO 830324	

1. SHEET 4 OF 4 C -SIZE
ASSY DWG.
NOTES.

c b m ENGINEERING OSAKA JAPAN	TITLE: SHIPPING ASSY. 8250 LP	DRAWN BY: T. Tokuda DATE 2/9/83 CHKD: R. Gidlund 3/1/83	APPR: DATE 3/1/83	SIZE B	250203	SHEET 1 OF 4

QUANTITY REQD PER PART/DASH NO.												ITEM	D. S.	PART NUMBER	DESCRIPTION	REF. DES	BEND	NOTES
							05	04	03	02	01							
											1	1	B/C	250603-01	FINAL ASSY. 8250LP UL			
										1		2		-02	CSA			
									1			3		-03	JIS			
								1				4		-04	VDE			
							1					5	B/C	250603-05	FINAL ASSY. 8250LP BSI			
												6						
												7						
												8						
							1	1	1	1	1	9	B	251087	DISKETTE TEST/DEMO 8250			
												10						
												11						
									1			12	B	251160	USER MANUAL JAPANESE			
							1	1		1	1	13	B	251159	USER MANUAL ENGLISH			
												14						
												15						
									1			16	B	251084	WARRANTY CARD JAPANESE			
							1	1		1	1	17	B	320046-01	WARRANTY CARD ENGLISH			
												18						
												19						
												20						
									1			21	B	1001031	ENVELOPE FOR WARRANTY			
												22						
												23						
									1	1	1	24	B	903508-04	POWER CORD (UL.CSA, JIS)			
								1				25	B	-08	(VDE)			
							1					26	B	903508-09	POWER CORD (BSI)			
												27						
												28						
												29						
												30						
												31						
												32						
												33						
												34						
												35						
												36						

c b m ENGINEERING OSAKA JAPAN	TITLE: SHIPPING ASSY. 8250LP	DRAWN BY: T. Tokuda	DATE 2/9/83	J. Rudy	DATE 3/1/83	SIZE B	250203	SHEET 2 OF 4
		CHKD: G. Nishia	3/1/83	APPR:	/ /			

QUANTITY REQD PER PART / DASH NO.												ITEM	D. S.	PART NUMBER	DESCRIPTION	REF. DES	BEND	NOTES
							05	04	03	02	01							
							1	1	1	1	1	37	B	4022044-04	POLY BAG □600×600×0.04t			FOR MAIN
							1	1	1	1	1	38	B	4022044-02	POLY BAG □90×250×0.04t			FOR POWER CORD
												39						
												40						
												41						
												42						
							1	1	1	1	1	43	C	251161	STYLE FOARM RIGHT			
							1	1	1	1	1	44	C	251162	STYLE FOARM LEFT			
												45						
												46						
												47						
							1	1	1	1	1	48	C	251164	OUTER CARTON			
												49						
												50						
							1	1	1	1	1	51	C	251163	INNER CARTON			
												52						
											2	53	B	251324 -01	CASE MARK UL			
										2		54	B	-02	CSA			
									2			55	B	-03	JIS			
								2				56	B	-04	VDE			
							2					57	B	251324 -05	CASE MARK BS1			
												58						
							2	2	2	2	2	59	B	251171	DUMMY DISKETTE			
												60						
							1	1	1	1	1	61	C	251325	PAD			FOR POWER CORD
												62						
												63						
												64						
												65						
												66						
												67						
												68						
												69						
												70						
												71						
												72						

c b m ENGINEERING OSAKA JAPAN	TITLE: SHIPPING ASSY. 8250LP	DRAWN BY: T. Tokuda	DATE 5/9/93		DATE 3/1/93	SIZE B	250203	SHEET 3 OF 4
		CHKD:	5/11/93	APPR:	/ /			

REVISIONS				
LTR	ZONE	DESCRIPTION	DATE	APPROVED
		SEE SHEET 1		

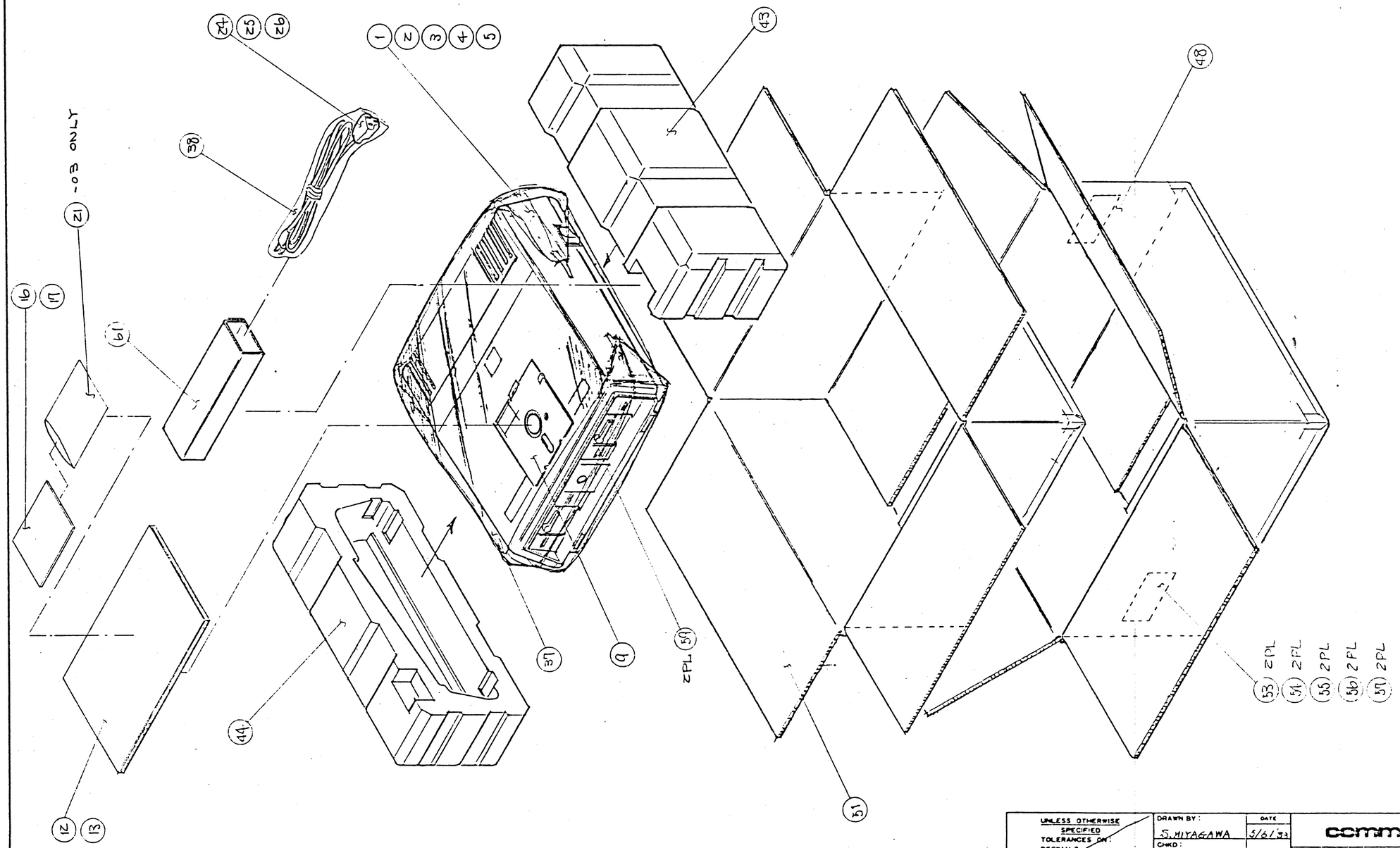

UNLESS OTHERWISE SPECIFIED TOLERANCES ON: DECIMALS X .XX .XXX ∠'S	DRAWN BY: S. MIYAGAWA	DATE 5/6/93	commodore
	CHKD:		SHIPPING ASSY 8250LP
	ENGR:	5/11/93	
	APPR:		
MATERIAL:	USED ON 8250LP	NEXT ASSY	SIZE C / 250203 / REV C
FINISH:			SCALE NONE / SHEET 4 OF 4

THIRD ANGLE SYSTEM. DIMENTION: mm A2 (200) E10 200-6303

PART NO.	DESCRIPTION
250402 -01	PCB ASSY. DUAL FLOPPY DIGITAL 8250 LP MASK ROM
-02	PCB ASSY. DUAL FLOPPY DIGITAL 8250 EP ROM (2564)
-03	PCB ASSY. DUAL FLOPPY DIGITAL 8050 LP MASK ROM
250402 -04	PCB ASSY. DUAL FLOPPY DIGITAL 8050 LP EP ROM (2564)

符号	年月日	変更内容の概要	記録	検印
A	83/3/1	PRODUCTION RELEASE	T.T	HO
B	83/8/22	REVISED PER ECO 830389		HO
C	83/8/22	REVISED PER ECO 830391		HO
D	83-11-11	REVISED PER ECO 830448		HO
E	12-14-83	REVISED PER ECO 830503		HO

2. SHEET 8 OF 8 B SIZE
   REWORK DWG.
1. SHEET 6&7 OF 8 C-SIZE
   ASSY DWG.
NOTES.

commodore	TITLE: PCB ASSY. DUAL FLOPPY DIGITAL	DRAWN BY: T. Tokuda	DATE 2/8/83		DATE 3/7/83	SIZE B	250402	SHEET 1 OF 8
		CHKD: A. Gishin	3/1/83	APPR: T. MITSUIGUTI	3/10/83			

QUANTITY REQD PER PART/DASH NO.				ITEM	D. S.	PART NUMBER	DESCRIPTION	REF. DES	BEND	NOTES
04	03	02	01							
	1		1	1	C	251120-01	PC BOARD DIGITAL 190 x 320 x 1.6t			GLASS EPOXY G10 MASK ROM
1		1		2	C	251120-02	PC BOARD DIGITAL 190 x 320 x 1.6t			GLASS EPOXY G10 EP ROM.
				3						
				4						
				5						
S	S	S	S	6	B	251168-01	IC 2716 EP-ROM	UC1		SUBSTITUTE FOR ITEM 10
2	2	2	2	7	B	901435-01	IC 6502 MPU	UAB4, UAB15		
1	1	1	1	8		901437-01	6522 VIA	UAB1		
1	1	1	1	9		251256-02	6530-050 PIA	UAB3		
1		1		10		251167-01	2516 EP ROM	UC1		
2	2	2	2	11		901458-01	6532 PIA	UAB17, UAB18		
	1		1	12		901467-01	2316- MASK ROM	UC1		
	1		1	13		901887-01	2364-118 MASK	UA13		$CØØØ ~ $DFFF
	1		1	14		901888-01	2364-119 MASK	UA11		$EØØØ ~ $FFFF
1		1		15		251166-01	2564- EP	UA13		$CØØØ ~ $DFFF
1		1		16		251165-01	2564- EP ROM	UA11		$EØØØ ~ $FFFF
2	2	2	2	17		325502-01	M58725P RAM	UB6, UB8		
1	1	1	1	18		901523-01	LM555 TIMER	UB12		
1	1	1	1	19		901523-10	LF353	UF3		
3	3	3	3	20		901524-01	MC3446 BUS INTERFACE	UD16, UD17, UD18		
1	1	1	1	21		901502-01	MC4066 CMOS SWITCH	UE4		
2	2	2	2	22		901521-17	74LS42 1 OF 10 DECODER	UC11, UC13		
2	2	2	2	23		-06	74LS74 D FLIP FLOP	UE3, UE13		
1	1	1	1	24		-15	74LS133 13 INPUT NAND	UD6		
1	1	1	1	25		-25	74LS153 4 INPUT MAX	UE8		
7	7	7	7	26		-11	74LS157 2 INPUT MAX	UA6, UA7		UA8, UC4, UC10, UD3, UD4
2	2	2	2	27		-28	74LS164 SIPO REG	UC5, UD5		
1	1	1	1	28		901521-12	74LS165 PISO REG	UC3		
1	1	1	1	29		901522-16	74190 UP/DN DEC COUN.	UF7		
1	1	1	1	30		-06	7406 INV BUFFER	UF10		
1	1	1	1	31		-19	7414 INV	UD13		
1	1	1	1	32		901522-01	7417 BUFFER	UD12		
1	1	1	1	33		901521-33	74LS163	UE2		
1	1	1	1	34		-34	74LS175	UE11		
2	2	2	2	35		901521-35	74LS194	UE7, UF8		
1	1	1	1	36	B	901525-01	IC 74S04	UE12		

commodore	TITLE: PCB ASSY. DUAL FLOPPY DIGITAL	DRAWN BY: T. Tokuda	DATE 2/8/83	DATE 3/1/83	SIZE B	250402	SHEET 2 OF 8
		CHKD:	3/1/83	APPR:	3/10/83		

QUANTITY REQD PER PART/DASH NO. 04	03	02	01	ITEM	O. S.	PART NUMBER	DESCRIPTION	REF. DES	BEND	NOTES
2	2	2	2	37	B	901521-03	IC 74LS08 AND	UC12.UC14		
4	4	4	4	38		-01	74LS00 NAND	UC16,UD8.UD9,		UD11
3	3	3	3	39		-21	74LS02 NOR	UC15,UD10.UE1		
2	2	2	2	40	B	901521-02	IC 74LS04 INV	UC9,UD7		
				41						
S	S	S	S	42	B	325502-03	IC TMM2016P RAM	UB6.UB8		SUBSTITUTE FOR ITEM 17
S	S	S	S	43	B	901522-30	IC 7407 BUFFER	UD12		SUBSTITUTE FOR ITEM 32
				44						
S	S	S	S	45	B	250414-02	PCB ASSY. 6530 ADAPTOR 8250LP	UAB3		SUBSTITUTE FOR ITEM 9
S	S	S	S	46	B	901435-02	6502A MPU	UAB4,UAB15		SUBSTITUTE FOR ITEM 7
S	S	S	S	47	B	901435-03	6502B MPU	UAB4,UAB15		SUBSTITUTE FOR ITEM 7
				48						
				49						
				50						
				51						
				52						
				53						
				54						
5	5	5	5	55	B	902671	TRANSISTOR NPN 2SC945	TR2-TR6		
S	S	S	S	56	B	902693-01	TRANSISTOR NPN 2SC1815	TR2-TR6		
1	1	1	1	57	B	902717	TRANSISTOR PNP 2SA733	TR1		
S	S	S	S	58	B	902744-01	TRANSISTOR PNP 2SA1015	TR1		
				59						
1	1	1	1	60	B	325566-04	CRYSTAL MODULE 12 MHz	Y1		
				61						
				62						
				63						
				64						
				65						
				66						
				67						
				68						
	REF		REF	69	D	251097-01	SCHEMATIC DIAGRAM			MASK ROM VERSION
REF		REF		70	D	251097-02	SCHEMATIC DIAGRAM			EP ROM VERSION
				71						
				72						

commodore	TITLE: PCB ASSY. DUAL FLOPPY DIGITAL	DRAWN BY: T. Tokuda	DATE 2/3/83	APPR: T. MATSUMOTO	DATE 3/10/83	SIZE B	250402	SHEET 3 OF 8
		CHKD: R. Fujibira	3/1/83				

QUANTITY REQD PER PART/DASH NO. 04	03	02	01	ITEM	D. S.	PART NUMBER	DESCRIPTION	REF. DES	BEND	NOTES
1	1	1	1	73	B	900850-05	DIODE SIGNAL WG-713C	D1		
S	S	S	S	74		900850-01	DIODE SIGNAL IN4148	D1		SUBSTITUTE FOR ITEM 73
				75						
				76						
				77						
				78						
57	57	57	57	79	B	900010-20	CAPACITOR CERAMIC 0.1μF/50V	C1-10,14,15,17-30		33-36,38-45,48-52,54,57-61,77-80,83-86
1	1	1	1	80		251072-26	220pF/50V	C76		
1	1	1	1	81		900010-38	0.01μF/50V	C13		
2	2	2	2	82		900010-53	330pF/50V	C81,C82		
14	14	14	14	83		251072-18	47pF/50V	C62-C75		
1	1	1	1	84		900010-52	150pF/50V	C56		
2	2	2	2	85		900010-48	100pF/50V	C37,C55		
1	1	1	1	86	B	900465-02	CAPACITOR CERAMIC 0.033μF/25V	C87		
1	1	1	1	87	B	900410-04	CAPACITOR TANTALIUM 1μF/16V	C88		
2	2	2	2	88	B	900100-25	CAPACITOR ELEC. LOW LEAK. 10μF/16V	C11,C12		
1	1	1	1	89	B	900100-40	CAPACITOR ELEC. 100μF/16V	C90		
1	1	1	1	90	B	900301-04	CAPACITOR ELEC 220μF/10V	C89		
S	S	S	S	91	B	900402-09	CAPACITOR TANTALIUM 10μF/16V	C11,C12		SUBSTITUTE FOR ITEM 88
				92						
1	1	1	1	93	B	325513-03	CHOKE COIL 100μH	L1		
1	1	1	1	94	B	325513-01	CHOKE COIL 2.2μH	L2		
				95						
16	16	16	16	96	B	325563-01	FERRITE BEAD	FB1-FB16		
S	S	S	S	97	B	903025-01	FERRITE BEAD	FB1-FB16		SUBSTITUTE FOR ITEM 96
				98						
				99						
4	4	4	4	100	B	901550-01	RESISTOR 1/4W ±5% 1KΩ	R5,20,24,40		
2	2	2	2	101		-03	5.1KΩ	R16,R18		
2	2	2	2	102		-85	2.4KΩ	R17,R19		
7	7	7	7	103		-53	2KΩ	R1,2,3,8,9,23,	34	
4	4	4	4	104		-18	2.2KΩ	R10,11,13,14		
1	1	1	1	105		-26	15KΩ	R21		
1	1	1	1	106		-99	43KΩ	R22		
4	4	4	4	107	B	901550-89	RESISTOR 1/4W ±5% 150Ω	R4,R38,R39,	R41	
				108						

commodore	TITLE: PCB ASSY. DUAL FLOPPY DIGITAL	DRAWN BY: T. Tokuda	DATE 2/8/83	APPR: T. HATSUMOTO	DATE 3/1/83	SIZE B	250402	SHEET 4 OF 8
		CHKD:	3/1/83		3/10/83			

QUANTITY REQD PER PART/DASH NO. 04	03	02	01	ITEM	D. S.	PART NUMBER	DESCRIPTION	REF. DES	BEND	NOTES
1	1	1	1	109	B	901751-17	RESISTOR 1/4W ±1% 7.15KΩ	R28		
1	1	1	1	110		-09	75Ω	R30		
1	1	1	1	111		-18	100Ω	R31		
1	1	1	1	112		-19	226Ω	R29		
1	1	1	1	113		901751-20	1/4W ±1% 200Ω	R32		
1	1	1	1	114		901550-06	1/4W ±5% 33KΩ	R35		
1	1	1	1	115		-23	2.7KΩ	R36		
1	1	1	1	116		-95	82KΩ	R27		
2	2	2	2	117		-31	680Ω	R12, R37		
5	5	5	5	118		-20	10KΩ	R7,15,25,26,33		
1	1	1	1	119	B	901550-07	RESISTOR 1/4W ±5% 100KΩ	R6		
				120						
				121						
				122						
				123						
				124						
1	3	1	3	125	B	904150-04	IC SOCKET 24PIN			
6	6	6	6	126	B	904150-06	IC SOCKET 40PIN			
2		2		127	B	904150-05	IC SOCKET 28 PIN			
				128						
				129						
				130						
				131						
1	1	1	1	132	B	325515-03	HEADER ASSY. RT-ANGLE 2.5 PITCH 3PIN	P4		MOLEX 3094-03A
1	1	1	1	133		250615-04	DUAL IN LINE 2.54 PITCH 26 PIN	P3		JAE PS-26PA-D4T1-A1
1	1	1	1	134		250615-05	DUAL IN LINE 2.54 PITCH 30PIN	P2		JAE PS-30PA-D4T1-A1
1	1	1	1	135	B	325520-03	HEADER ASSY. 3.96 PITCH 3PIN	P1		MOLEX 5273-03A
S	S	S	S	136	B	251151-03	HEADER ASSY. DUAL IN LINE 2.54 PITCH 26PIN	P3		MITSUMI 299-26-30-314 SUB. FOR ITEM 133.
				137						
A/R	A/R	A/R	A/R	138	B	251692-01	ADHESIVE			TAKPAK
				139						
1	1	1	1	140	B	251584-08	WRAPPING WIRE AWG 28			L = 15 mm
1	1	1	1	141	B	-09				L = 80 mm
1	1	1	1	142	B	-10				L = 90 mm
1	1	1	1	143	B	251584-11	WRAPPING WIRE AWG 28			L = 100 mm
				144						

commodore	TITLE: PCB ASSY. DUAL FLOPPY DIGITAL	DRAWN BY: T. Tokuda	DATE 2/8/83	Y. Okubo	DATE 3/1/83	SIZE B	250402	SHEET 5 OF 8
		CHKD: G. Fujiwara	3/1/83	APPR: T. MATSUMOTO	3/10/83			

REVISIONS				
LTR	ZONE	DESCRIPTION	DATE	APPROVED
		SEE SHEET 1		

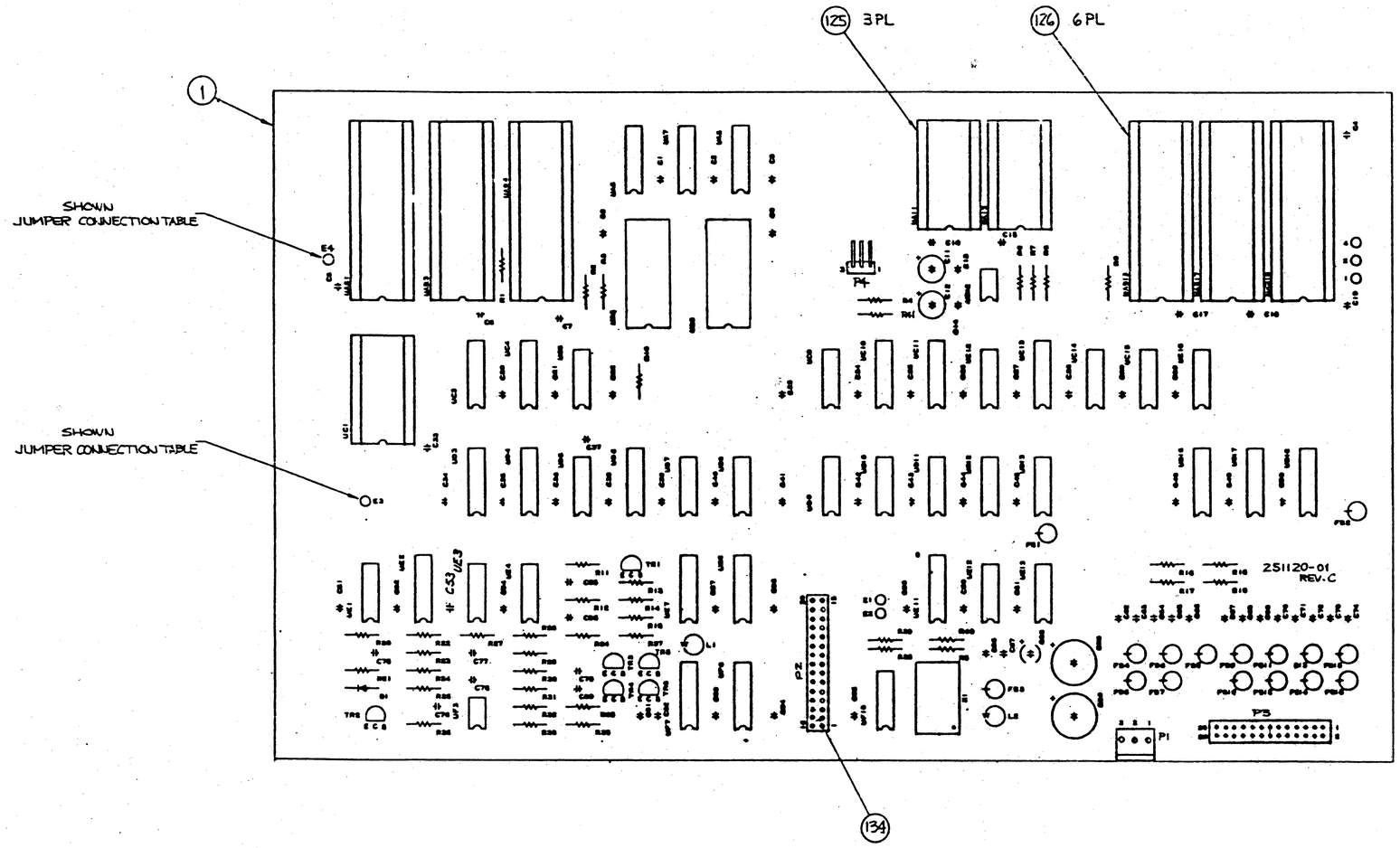

DASH NO.	USED ON	JUMPER TABLE	
		E3	E4
-01	8250	SHORT	SHORT
-03	8050	OPEN	OPEN

JUMPER CONNECTION TABLE

-01 AND -03 SHOWN

UNLESS OTHERWISE SPECIFIED TOLERANCES ON: DECIMALS .X ± .XX ± .XXX ± ∠'S ±	DRAWN BY: K. Moriyama	DATE 3/2/83	commodore
	CHKD:	3/4/83	PCB ASSY DUAL FLOPPY DIGITAL
	ENGR:	3/10/83	
	APPR:	3/10/83	
MATERIAL:	USED ON 8250 8050	NEXT ASSY	SIZE C 250402 REV E
FINISH:			SCALE NONE SHEET 6 OF 8

REVISIONS				
LTR	ZONE	DESCRIPTION	DATE	APPROVED
		SEE SHEET 1		

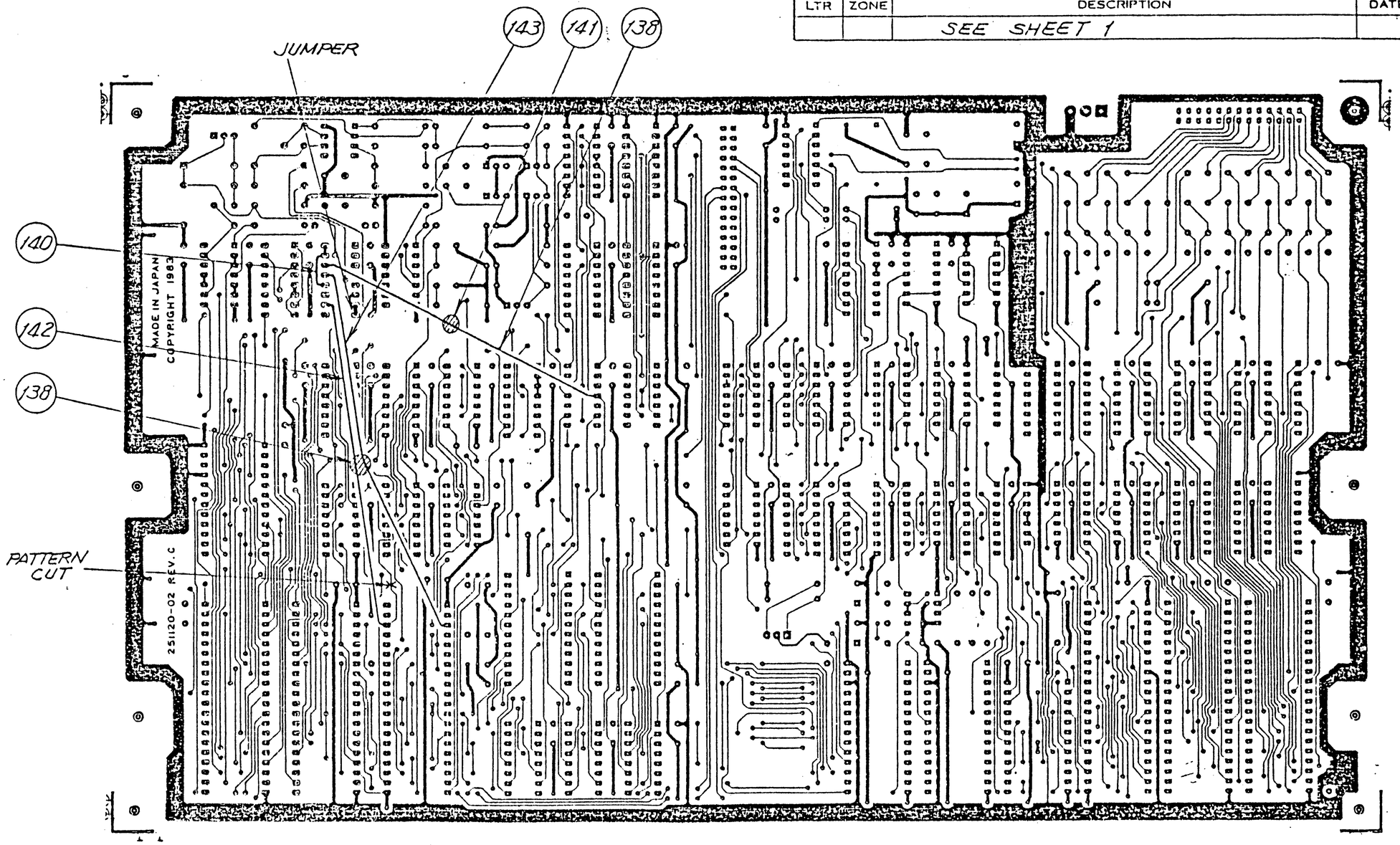

SOLDER SIDE SHOWN

UNLESS OTHERWISE SPECIFIED TOLERANCES ON: DECIMALS .X ± .XX ± .XXX ± ∠'S ±	DRAWN BY: R. Sida	DATE 12-8-83	commodore
	CHKD:		PCB ASSY DUAL FLOPPY DIGITAL
	ENGR:		
	APPR:		
MATERIAL:	USED ON	NEXT ASSY	SIZE B · 250402 · REV E
FINISH:	8250LP		SCALE 1/1 · SHEET 8 OF 8

PART NO.	DESCRIPTION
250404-01	PCB ASSY. DUAL FLOPPY ANALOG 8250LP

符号	年月日	変更などの内容	記印	検印
A	83/3/10	PRODUCTION RELEASE	T.T	[illegible]
B	83/4/11	REVISED PER ECO 830147		[illegible]
C	83/4/26	REVISED PER ECO 830197		[illegible]

1. SHEET 6 OF 6 IS B-SIZE
   ASSY DWG.
NOTES.

cbm ENGINEERING OSAKA JAPAN	TITLE: PCB ASSY, DUAL FLOPPY ANALOG	DRAWN BY: T. Tokuda	DATE 11/23/82	[illegible]	DATE 3/1/83	SIZE B	250404	SHEET 1 OF 6
		CHKD: [illegible]	3/1/83	APPR: T. HATSUKUSA	3/10/83			

QUANTITY REQD PER PART/DASH NO. 01	ITEM	D. S.	PART NUMBER	DESCRIPTION	REF. DES	BEND	NOTES
1	1	C	251121	PC BOARD 230 X 62.5 X 1.6t			GLASS EPOXY G-10
	2						
	3						
REF	4	D	251127	SCHEMATIC DIAGRAM ANALOG			
	5						
	6						
	7						
	8						
	9						
	10						
	11						
3	12	B	901521-01	IC 74LS00 NAND	1J, 2D, 2F		
1	13	↑	-21	74LS02 NOR	2G		
2	14		-30	74LS14 INV	1G, 2J		
1	15		-06	74LS74 D FLIP FLOP	2E		
1	16		-32	74LS86 2-EX-OR	2H		
1	17		901521-24	74LS10 3 INPUT NAND	1K		
1	18		901522-09	7438 NAND O.C	1D		
1	19		-39	7445 DECODER	2A		
1	20		-01	7417 BUFFER	1M		
2	21		901522-40	74276 J-K FF	1F, 1H		
4	22		251099-01	75477 DRIVER	2LA, 2LB, 2MA, 2MB		
1	23		901510-01	9602	1E		
1	24	↓	251098-01	HA16631P FDD READ AMP	2B		
1	25	B	251101-01	IC M001WT	1BC		
S	26	B	901522-30	IC 7407 BUFFER	1M		SUBSTITUTE FOR ITEM 20
	27						
	28						
	29						
	30						
	31						
	32						
	33						
	34						
	35						
	36						

c b m ENGINEERING OSAKA JAPAN	TITLE: PCB ASSY, DUAL FLOPPY ANALOG	DRAWN BY: T. Tokuda	DATE 11/23/82	G. Okubo	DATE 3/1/83	SIZE B	250404	SHEET 2 OF 6
		CHKD: R. Fujiwara	3/1/83	APPR: T. MATSUMOTO	3/10/83		

QUANTITY REQD PER PART/DASH NO. 01	ITEM	D. S.	PART NUMBER	DESCRIPTION	REF. DES	BEND	NOTES
1	37	B	251124-48	RESISTOR CARBON 1/6W ±5% 200Ω	R12		
2	38		-55	390Ω	R19, R20		
4	39		-57	470Ω	R21, 22, 25, 26		
4	40		-69	1.5kΩ	R23, 24, 27, 28		
1	41		-72	2kΩ	R30		
3	42		-73	2.2kΩ	R10, 17, 18		
1	43		-83	5.6kΩ	R9		
4	44		-84	6.2kΩ	R3-R6		
1	45		-89	10kΩ	R15		
1	46	B	251124-105	RESISTOR CARBON 1/6W ±5% 47kΩ	R13		
	47						
	48						
1	49	B	901550-49	RESISTOR CARBON 1/4W ±5% 100Ω	R29		
8	50		-89	150Ω	R36, 39, 42, 45, 47, 49, 52, 57		
4	51		-01	1kΩ	R32, 35, 40, 41		
2	52	B	-22	47kΩ	R46, R55		
2	53	B	-53	2kΩ	R37, R38		
2	54	B	901550-56	1/4W ±5% 47Ω	R43, R44		
2	55	B	901600-45	RESISTOR CARBON 1/2W ±5% 68Ω	R50, R56		
1	56	B	902180-06	RESISTOR METAL OXIDE 1W ±5% 110Ω	R11		
	57						
	58						
1	59	B	251125-104	RESISTOR METAL OXIDE 1/8W ±1% 75Ω	R58		
1	60		-140	174Ω	R59		
2	61	B	251125-338	RESISTOR METAL OXIDE 1/8W ±1% 9.09kΩ	R7, R8		
	62						
	63						
	64						
2	65	B	901751-48	RESISTOR METAL OXIDE 1/4W ±1% 33.2kΩ	R33, R34		
	66						
	67						
	68						
1	69	B	902265-04	POTENTION METER 20kΩ	VR1		B-TYPE RGS6-FAN
	70						
	71						
	72						

c b m ENGINEERING OSAKA JAPAN	TITLE: PCB ASSY, DUAL FLOPPY ANALOG	DRAWN BY: T. Tokuda	DATE 11/23/82	T. Okubo	DATE 3/1/83	SIZE B	250404	SHEET 3 OF 6
		CHKD: R. Fujiwara	3/1/83	APPR: T. MATSUMOTO	3/10/83			

QUANTITY REQD PER PART/DASH NO. 01	ITEM	D.S.	PART NUMBER	DESCRIPTION	REF. DES	BEND	NOTES
4	73	B	900010-38	CAPACITOR CERAMIC 0.01μF/50V	C19-C22		
22	74		900010-20	CERAMIC 0.1μF/50V	C6,12,14,18,24,26,28-43		
1	75		251122-08	MONOLITHIC CERAMIC 120pF/25V	C2		±5%
1	76		-09	150pF/25V	C13		
1	77		-12	270pF/25V	C4		
1	78		251122-17	680pF/25V	C9		±5%
1	79		251123-07	3300pF/25V	C7		±20%
5	80		251123-25	MONOLITHIC CERAMIC 0.1μF/25V	C5,8,10,11,15		±20%
1	81	B	325549-03	CAPACITOR FILM 0.039μF/50V	C16		±5%
	82						
	83						
	84						
2	85	B	900402-08	CAPACITOR TANTALIUM 4.7μF/25V	C1,C3		
	86						
	87						
3	88	B	900100-40	CAPACITOR ELECT. 100μF/16V	C17,23,25		
	89						
	90						
	91						
	92						
2	93	B	251126-35	COIL INDUCTOR 150μH	L3,L4		
2	94	B	251126-33	COIL INDUCTOR 100μH	L1,L2		
	95						
	96						
	97						
	98						
1	99	B	325506-01	DIODE ZENER 5.1V 500mW ±5%	D1		HZ5C-2
3	100	B	900850-05	DIODE SIGNAL WG-713C	D2-D4		
4	101	B	251100-01	DIODE ARRAY 4ELEMENT DAP-401	DP3-DP6		
2	102	B	251100-02	DIODE ARRAY 2ELEMENT DAP-201	DP1,DP2		
S	103	B	900850-01	DIODE SIGNAL 1N4148	D2-D4		SUBSTITUTE FOR ITEM 100
S	104	B	900948-11	DIODE ZENER 5.1V 500mW ±5%	D1		SUBSTITUTE FOR ITEM 99
	105						
	106						
	107						
	108						

cbm ENGINEERING OSAKA JAPAN	TITLE: PCB ASSY, DUAL FLOPPY ANALOG	DRAWN BY: T. Tokuda	DATE 11/23/82	DATE 3/1/83	SIZE B	250404	SHEET 4 OF 6
		CHKD:	3/1/83	APPR: T. HATSUHORI 3/10/83			

QUANTITY REQD PER PART/DASH NO. 01	ITEM	D.S.	PART NUMBER	DESCRIPTION	REF. DES	BEND	NOTES
	109						
	110						
	111						
	112						
2	113	B	250615 -10	HEADER ASSY. DUAL IN LINE 2.54 PITCH 12PIN	P1, P2		PS-12PA-D4T1-A1
2	114	↕	250615 -11	HEADER ASSY. DUAL IN LINE 2.54 PITCH 24PIN	P4, P5		PS-24PA-D4T1-A1
1	115	↕	325520 -04	HEADER ASSY. SINGLE LINE 3.96 PITCH 4PIN	P6		MODEX 5273-04A
1	116	B	250614-03	CONNECTOR 2.54 PITCH 30PIN	P3		JAE PS-30SD-D4T1-1
	117						
	118						
	119						
	120						
	121						
	122						
	123						
A/R	124	B	904902	CEMENT PLASTIC			
	125						
	126						
	127						
	128						
1	129	B	251157	SHIELD PLATE, HEAD CONNECTOR			
	130						
	131						
1	132	B	251158	INSULATION SHEET			
	133						
	134						
	135						
	136						
	137						
	138						
	139						
	140						
	141						
	142						
	143						
	144						

c b m ENGINEERING OSAKA JAPAN	TITLE: PCB ASSY, DUAL FLOPPY ANALOG	DRAWN BY: T. Tokuda	DATE 11/23/82		DATE 3/1/83	SIZE B	250404	SHEET 5 OF 6
		CHKD:	3/1/83	APPR: T. MATSUMOTO	3/8/83			

REVISIONS				
LTR	ZONE	DESCRIPTION	DATE	APPROVED
		SEE SHEET 1		

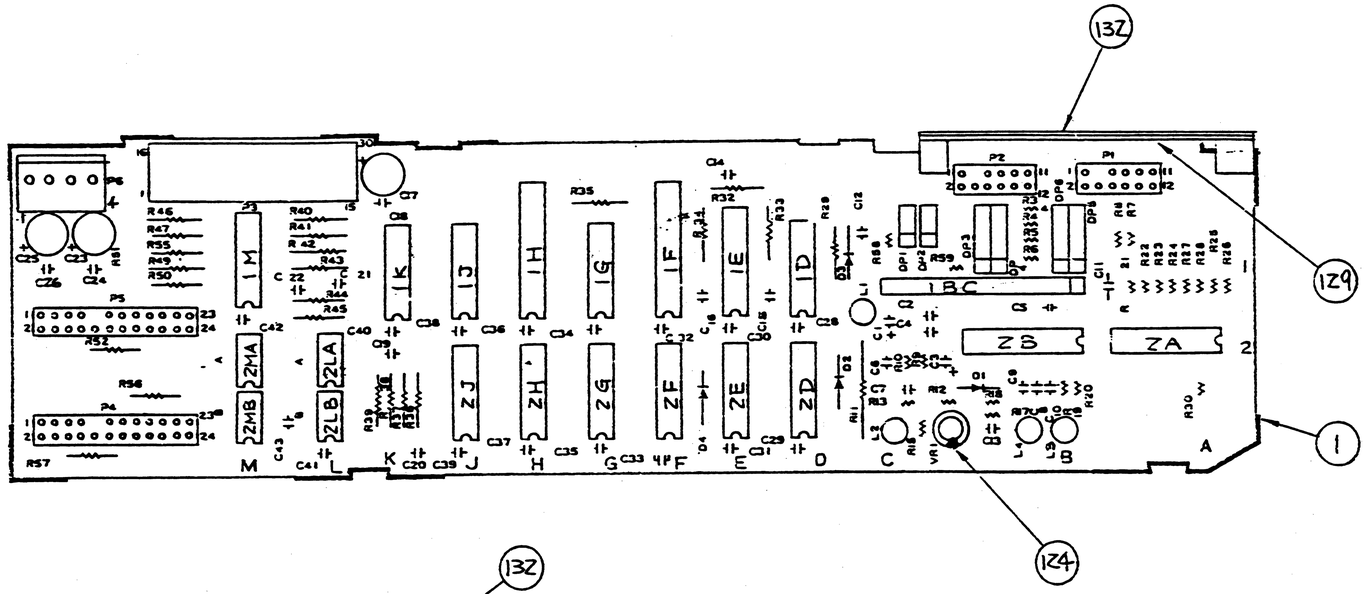

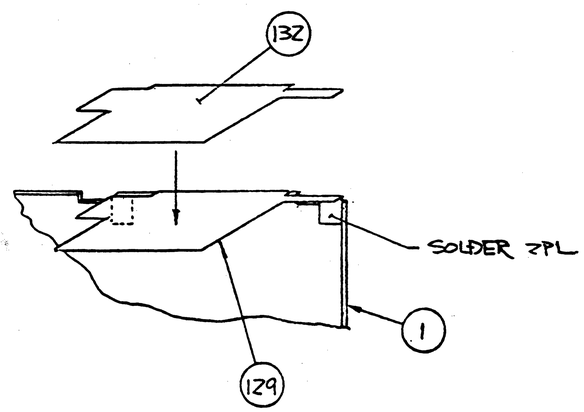

UNLESS OTHERWISE SPECIFIED TOLERANCES ON: DECIMALS .X ± .XX ± .XXX ± ∠'S ±	DRAWN BY: J. Takuda	DATE 2/22/83	commodore
	CHKD:		PCB ASSY DUAL FLOPPY ANALOG
	ENGR:	3/10/83	
	APPR: T. HATTORI	3/10/83	
MATERIAL:	USED ON 8250	NEXT ASSY	SIZE B · 250404 · REV C
FINISH:			SCALE NONE · SHEET 6 OF 6

PART NO.	DESCRIPTION
250404-01	PCB ASSY. DUAL FLOPPY ANALOG, 8250LP

符号	年月日	変更などの概要	記印	検印
A	83/3/10	PRODUCTION RELEASE	T.T	[illegible]
B	83/4/11	REVISED PER ECO 830147		[illegible]
C	83/4/26	REVISED PER ECO 830197		[illegible]
D	83/8/22	REVISED PER ECO 830392		[illegible]
E	83-11-11	REVISED PER ECO 830463		[illegible]

1. SHEET 6 OF 6 IS B-SIZE
   ASSY DWG.
NOTES.

c b m ENGINEERING OSAKA JAPAN	TITLE: PCB ASSY, DUAL FLOPPY ANALOG	DRAWN BY: T. Tokuda	DATE 11/23/82	[illegible]	DATE 3/1/83	SIZE B	250404	SHEET 1 OF 6
		CHKD: [illegible]	3/1/83	APPR: T. HOTSUMI	3/10/83			

QUANTITY REQD PER PART/DASH NO. 01	ITEM	D. S.	PART NUMBER	DESCRIPTION	REF. DES	BEND	NOTES
1	37	B	251124-48	RESISTOR CARBON 1/6W ±5% 200Ω	R12		
2	38	↓	-55	390Ω	R19, R20		
4	39		-57	470Ω	R21, 22, 25, 26		
4	40		-69	1.5kΩ	R23, 24, 27, 28		
1	41		-72	2kΩ	R30		
3	42		-73	2.2kΩ	R10, 17, 18		
1	43		-83	5.6kΩ	R9		
4	44		-84	6.2kΩ	R3 - R6		
1	45		-89	10kΩ	R15		
1	46	B	251124-105	RESISTOR CARBON 1/6W ±5% 47kΩ	R13		
	47						
	48						
1	49	B	901550-49	RESISTOR CARBON 1/4W ±5% 100Ω	R29		
2	50	B	901550-89	RESISTOR CARBON 1/4W ±5% 150Ω	R47, R49		
6	51	B	901550-01	RESISTOR CARBON 1/4W ±5% 1kΩ	R32, 35, 40, 41, 42, 45		
2	52	B	901550-22	RESISTOR CARBON 1/4W ±5% 47kΩ	R46, R55		
	53						
	54						
2	55	B	901600-45	RESISTOR CARBON 1/2W ±5% 68Ω	R50, R56		
1	56	B	902180-06	RESISTOR METAL OXIDE 1W ±5% 110Ω	R11		
	57						
	58						
1	59	B	251125-104	RESISTOR METAL OXIDE 1/8W ±1% 75Ω	R58		
1	60	↓	-140	174Ω	R59		
2	61	B	251125-338	RESISTOR METAL OXIDE 1/8W ±1% 9.09kΩ	R7, R8		
	62						
	63						
	64						
2	65	B	901751-48	RESISTOR METAL OXIDE 1/4W ±1% 33.2kΩ	R33, R34		
	66						
	67						
	68						
1	69	B	902265-04	POTENTION METER 20kΩ	VR1		B-TYPE RGS6-FAN
	70						
	71						
	72						

cbm ENGINEERING
OSAKA JAPAN

TITLE: PCB ASSY, DUAL FLOPPY ANALOG

DRAWN BY:	DATE		DATE	SIZE		SHEET
T. Tokuda	11/23/82	T. Tokuda	3/1/83	B	250404	3 OF 6
CHKD: R. Fujima	3/1/83	APPR: T. MATSUMOTO	3/10/83			

REVISIONS				
LTR	ZONE	DESCRIPTION	DATE	APPROVED
		SEE SHEET 1		

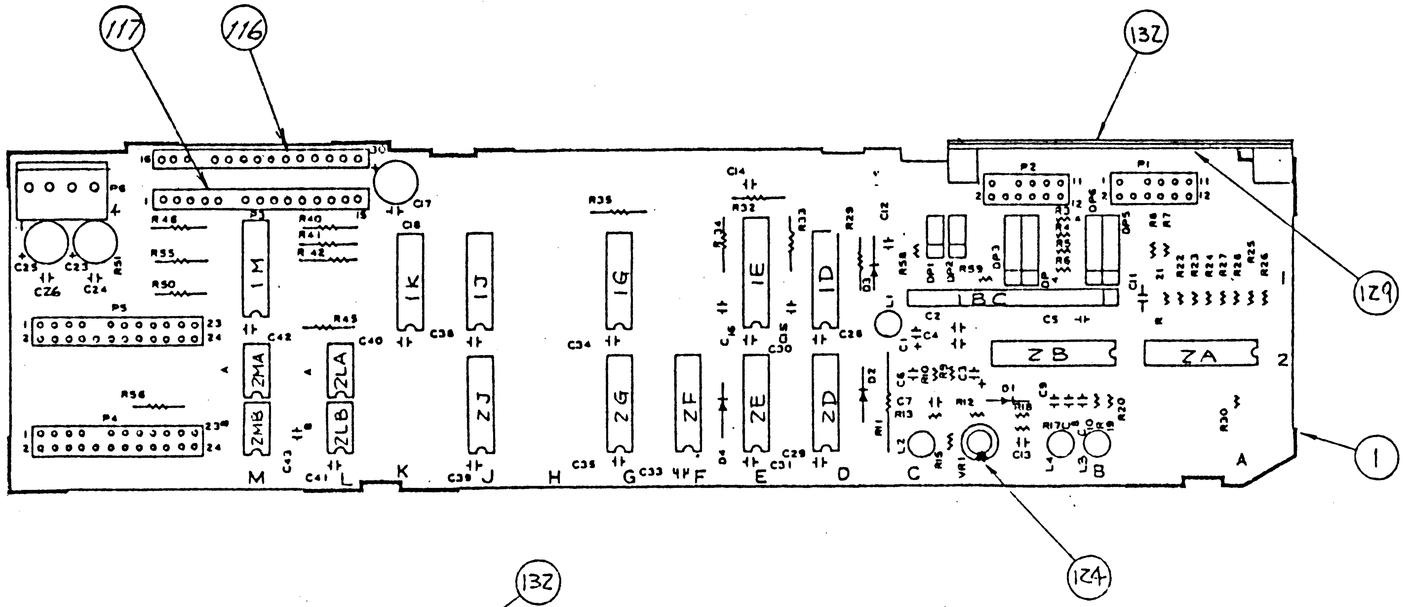

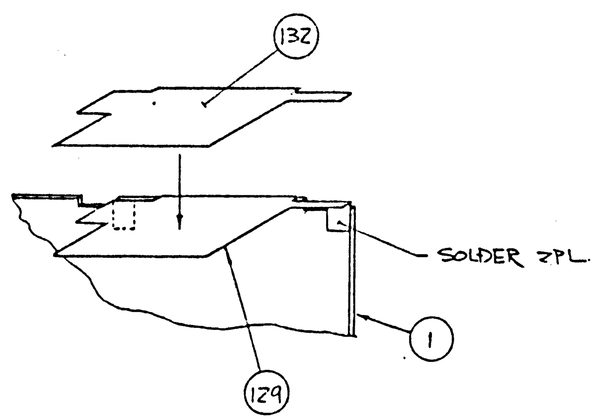

UNLESS OTHERWISE SPECIFIED TOLERANCES ON: DECIMALS .X ± .XX ± .XXX ± ∠'S ±	DRAWN BY: T. Tokuda	DATE 2/22/83	commodore
	CHKD:		PCB ASSY DUAL FLOPPY ANALOG
	ENGR:	3/10/83	
	APPR: T. MATSUMOTO	3/10/83	
MATERIAL:	USED ON 8250	NEXT ASSY	SIZE B · 250404 · REV E
FINISH:			SCALE NONE · SHEET 6 OF 6

E02 500-0212

QUANTITY REQD PER PART/DASH NO. 01	ITEM	D. S.	PART NUMBER	DESCRIPTION	REF. DES	BEND	NOTES
1	1	C	251121	PC BOARD 230 X 62.5 X 1.6t			GLASS EPOXY G-10
	2						
	3						
REF	4	D	251127	SCHEMATIC DIAGRAM ANALOG			
	5						
	6						
	7						
	8						
	9						
	10						
	11						
3	12	B	901521-01	IC 74LS00 NAND	1J.2D.2F		
1	13	↑	-21	74LS02 NOR	2G		
2	14	↓	-30	74LS14 INV	1G.2J		
1	15	B	901521-06	IC 74LS74 D FLIP FLOP	2E		
	16						
1	17	B	901521-24	IC 74LS10 3 INPUT NAND	1K		
1	18	↑	901522-09	7438 NAND O.C	1D		
1	19	↓	901522-39	7445 DECODER	2A		
1	20	B	901522-01	IC 7417 BUFFER	1M		
	21						
4	22	B	251099-01	IC 75477 DRIVER	2LA.2LB.2MA.2MB		
1	23	↑	901510-01	9602	1E		
1	24		251098-01	HA16631P FDD READ AMP	2B		
1	25	↓	251101-01	IC M001WT	1BC		
S	26	B	901522-30	IC 7407 BUFFER	1M		SUBSTITUTE FOR ITEM 20
	27						
	28						
	29						
	30						
	31						
	32						
	33						
	34						
	35						
	36						

c b m ENGINEERING OSAKA JAPAN	TITLE: PCB ASSY, DUAL FLOPPY ANALOG	DRAWN BY: T. Tokuda	DATE 11/23/82	J. Obuchi	DATE 3/1/83	SIZE B	250404	SHEET 2 OF 6
		CHKD: [illegible]	3/1/83	APPR: T. MATSUMOTO	3/1/83		

QUANTITY REQD PER PART/DASH NO. 01	ITEM	D. S.	PART NUMBER	DESCRIPTION	REF. DES	BEND	NOTES
	73						
19	74	B	900010-20	CAPACITOR CERAMIC 0.1μF/50V	C6,12,14,18,	24,	26,28-31,33-35,38-43
1	75		251122-08	MONOLITHIC CERAMIC 120pF/25V	C2		±5%
1	76		-09	150pF/25V	C13		
1	77		-12	270pF/25V	C4		
1	78		251122-17	680pF/25V	C9		±5%
1	79		251123-07	3300pF/25V	C7		±20%
5	80		251123-25	MONOLITHIC CERAMIC 0.1μF/25V	C5,8,10,11,15		±20%
1	81	B	325549-03	CAPACITOR FILM 0.039μF/50V	C16		±5%
	82						
	83						
	84						
2	85	B	900402-08	CAPACITOR TANTALIUM 4.7μF/25V	C1,C3		
	86						
	87						
3	88	B	900100-40	CAPACITOR ELECT. 100μF/16V	C17,23,25		
	89						
	90						
	91						
	92						
2	93	B	251126-35	COIL INDUCTOR 150μH	L3,L4		
2	94	B	251126-33	COIL INDUCTOR 100μH	L1,L2		
	95						
	96						
	97						
	98						
1	99	B	325506-01	DIODE ZENER 5.1V 500mW ±5%	D1		HZ5C-2
3	100	B	900850-05	DIODE SIGNAL WG-713C	D2-D4		
4	101	B	251100-01	DIODE ARRAY 4ELEMENT DAP-401	DP3-DP6		
2	102	B	251100-02	DIODE ARRAY 2ELEMENT DAP-201	DP1,DP2		
5	103	B	900850-01	DIODE SIGNAL 1N4148	D2-D4		SUBSTITUTE FOR ITEM 100
5	104	B	900948-11	DIODE ZENER 5.1V 500mW ±5%	D1		SUBSTITUTE FOR ITEM 99
	105						
	106						
	107						
	108						

c b m ENGINEERING OSAKA JAPAN	TITLE: PCB ASSY, DUAL FLOPPY ANALOG	DRAWN BY: T. Tokuda	DATE 11/23/82	DATE 3/1/83	SIZE B	250404	SHEET 4 OF 6
		CHKD: A. Fujiwara	3/1/83	APPR: T. MATSUMOTO 3/10/83			

QUANTITY REQD PER PART/DASH NO.	ITEM	D. S.	PART NUMBER	DESCRIPTION	REF. DES	BEND	NOTES
01							
	109						
	110						
	111						
	112						
2	113	B	250615 - 10	HEADER ASSY, DUAL IN LINE 2.54 PITCH 12PIN	P1, P2		PS-12PA-D4T1-A1
2	114		250615 - 11	, DUAL IN LINE 2.54 PITCH 24PIN	P4, P5		PS-24PA-D4T1-A1
1	115		325520 - 04	, SINGLE LINE 3.96 PITCH 4PIN	P6		MODEX 5273-04A
1	116		250686 - 01	, LOW PROFILE, SINGLE 15PIN	P3		PS-15PA-S4T1-PKL1-11
1	117	B	250686 - 02	HEADER ASSY, LOW PROFILE, SINGLE 15PIN	P3		PS-15PA-S4T1-PKL1-10
	118						
	119						
	120						
	121						
	122						
	123						
N/R	124	B	904902	CEMENT PLASTIC			
	125						
	126						
	127						
	128						
1	129	B	251157	SHIELD PLATE, HEAD CONNECTOR			
	130						
	131						
1	132	B	251158	INSULATION SHEET			
	133						
	134						
	135						
	136						
	137						
	138						
	139						
	140						
	141						
	142						
	143						
	144						

c b m ENGINEERING OSAKA JAPAN	TITLE: PCB ASSY, DUAL FLOPPY ANALOG	DRAWN BY: T. Takuda	DATE 11/23/82		DATE 3/1/83	SIZE B	250404	SHEET 5 OF 6
		CHKD:	3/1/83	APPR: T. MATSUMOTO	3/8/83			

PART NO.	DESCRIPTION	
250603-01	FINAL ASSY. 8250 LP	UL
-02		CSA
-03		JIS
-04		VDE
250603-05	FINAL ASSY. 8250 LP	BSI

A	/ /	PRODUCTION RELEASE	T.T
B	3/9/7	REVISED PER ECO 830141	H.N
C	7/21/83	REVISED PER ECO 830354	G. Suishin

2. TO BE USED "LISTED UL & (UL)" ON RATING LABEL.
1. SHEET 3&4 OF 4 ARE D-SIZE ASSY DWG.

NOTES.

c b m ENGINEERING OSAKA JAPAN	TITLE: FINAL ASSY. 8250 LP	DRAWN BY: T. Tokuda DATE 3/9/83	DATE 3/11/83	SIZE B	250603	SHEET 1 OF 4
		CHKD: G. Suishin 3/11/83	APPR: / /			

QUANTITY REQD PER PART/DASH NO.					ITEM	D. S.	PART NUMBER	DESCRIPTION	REF. DES	BEND	NOTES
05	04	03	02	01							
				1	1	B/C	250609 -01	BASE ASSY. 8250 LP UL			
			1		2		-02	CSA			
		1			3		-03	JIS			
	1				4		-04	VDE			
1					5	B/C	250609 -05	BASE ASSY 8250 LP BSI			
1	1	1	1	1	6	B	251136-01	LABEL, DRIVE 0			
1	1	1	1	1	7	B	251136-02	LABEL, DRIVE 1			
					8						
1	1	1	1	1	9	D	251139	CASE, TOP			
1	1	1	1	1	10	C	251143	BEZEL, FRONT			
5	5	5	5	5	11	B	251132	INSERT NUT			
1	1	1	1	1	12	B	251135	PLATE MODEL			
					13						
					14						
4	4	4	4	4	15	B	950150 -01	FOOT SELF ADHESIVE			
					16						
					17						
			1	S	18	B	251085 -01	LABEL RATING 8250 LP UL, CSA			NOT LISTED UL & CSA. SUB. FOR ITEM 22. SEE NOTE 2.
		1			19		-02	JIS			
	1				20		-03	VDE			
1					21		-04	BSI			
				1	22	B	251085 -05	LABEL RATING 8250LP UL			LISTED UL. SEE NOTE 2.
					23						
				1	24	B	251086	LABEL, FCC CLASS A			
		1		1	25	B	251115 -06	LABEL WARNING, FUSE REPLACEMENT			ENGLISH
1	1				26	B	251115 -04				ENGLISH
			1		27	B	251114 -07	LABEL WARNING, FUSE REPLACEMENT			FRENCH/ENGLISH
			1	1	28	B	4022056	LABEL WARNING, CSA			
					29						
1	1	1	1	1	30	B	251117	HARNESS ASSY LED			
1	1	1	1	1	31	B	251119-02	LED TRI-STATE		CHART	GL-5ND5
1	1	1	1	1	32	B	251152	LAMP HOLDER SET			SANKEN SLH50
					33						
					34						
8	8	8	8	8	35	B	906800-04	SCREW PAN HEAD M3-12			
6	6	6	6	6	36	B	906883-01	SCREW SELF-TAPPING M3-8			

c b m ENGINEERING OSAKA JAPAN	TITLE: FINAL ASSY. 8250 LP	DRAWN BY: T. Tokuda	DATE 2/9/83	J. Okada	DATE 3/1/83	SIZE B	250603
		CHKD: G. Gudrie	3/1/83	APPR:	/ /		SHEET 2 OF 4

REVISIONS				
LTR	ZONE	DESCRIPTION	DATE	APPROVED
		SEE SHEET 1		

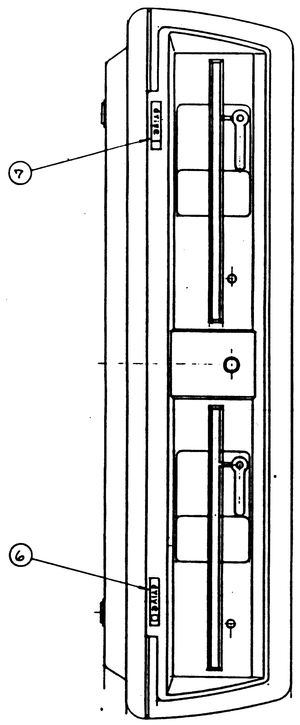

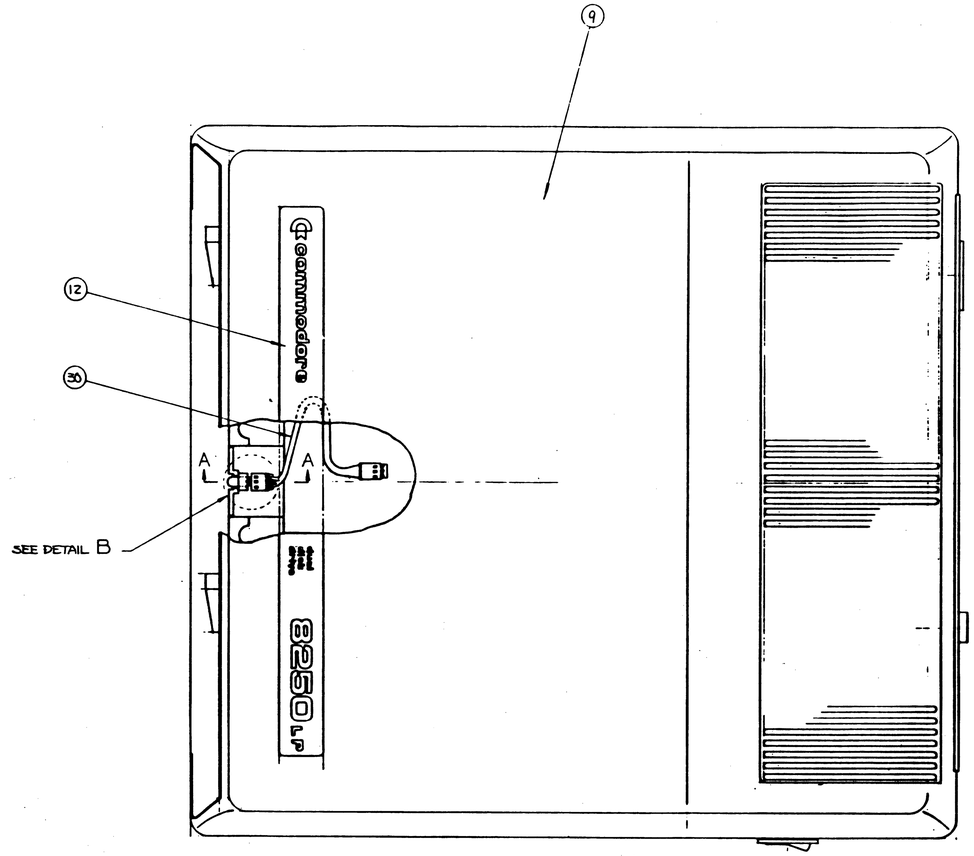

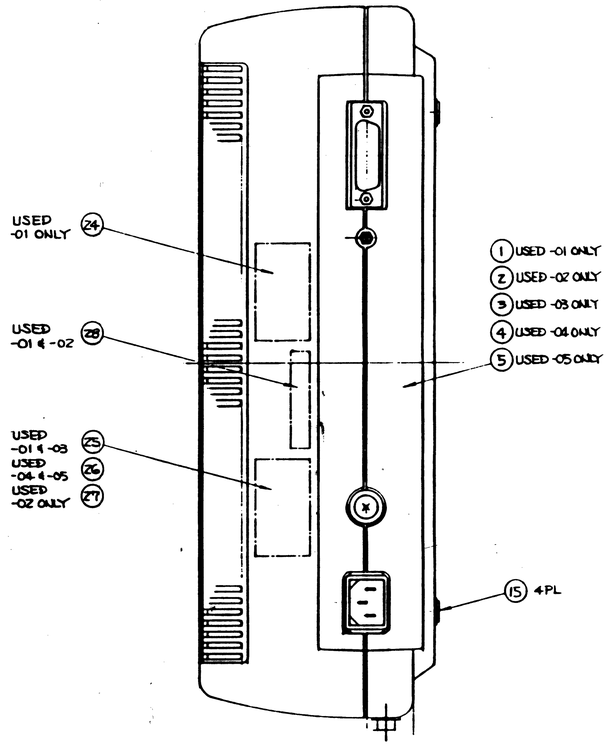

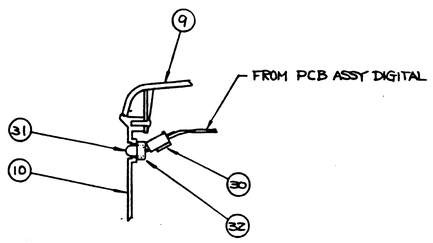

SECTION A-A

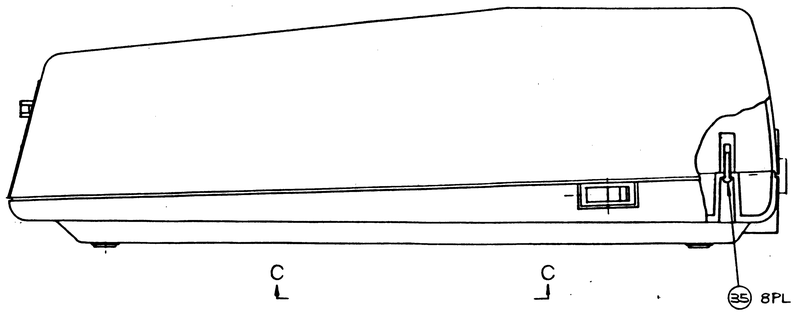

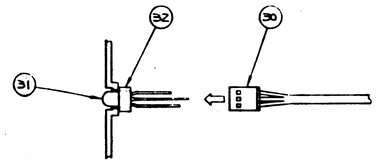

DETAIL B TOP VIEW

UNLESS OTHERWISE SPECIFIED TOLERANCES ON DECIMALS .XX ±.02, .XXX ±.005, ∠'S ±1°	DRAWN BY: K Monyman	DATE: 4/5/83	commodore
	CHKD:		FINAL ASSY 8250 LP
	ENGR:	4/11/83	
	APPR:		
MATERIAL:	USED ON: 8250LP	NEXT ASSY: 250203	SIZE D 250603 REV C
FINISH:			SCALE NONE SHEET 3 OF 4

THIRD ANGLE SYSTEM DIMENSION: mm

REVISIONS				
LTR	ZONE	DESCRIPTION	DATE	APPROVED
		SEE SHEET 1		

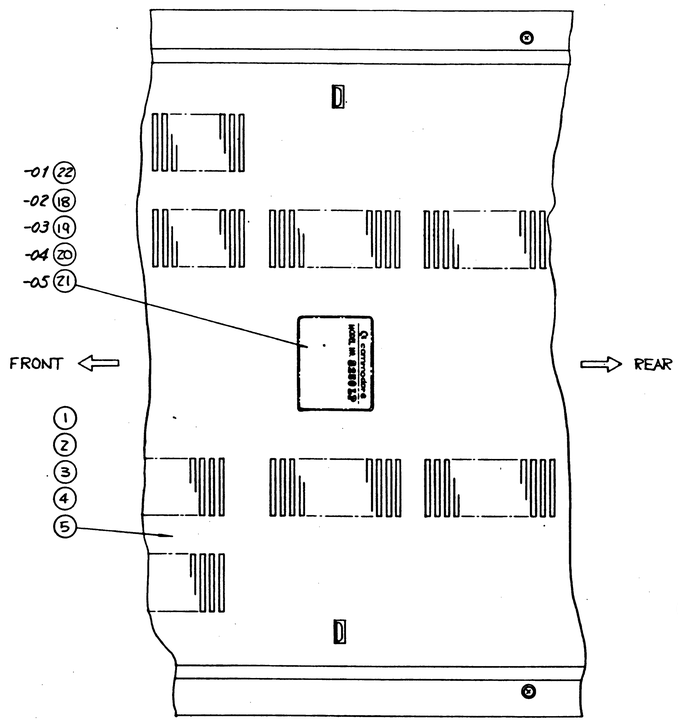

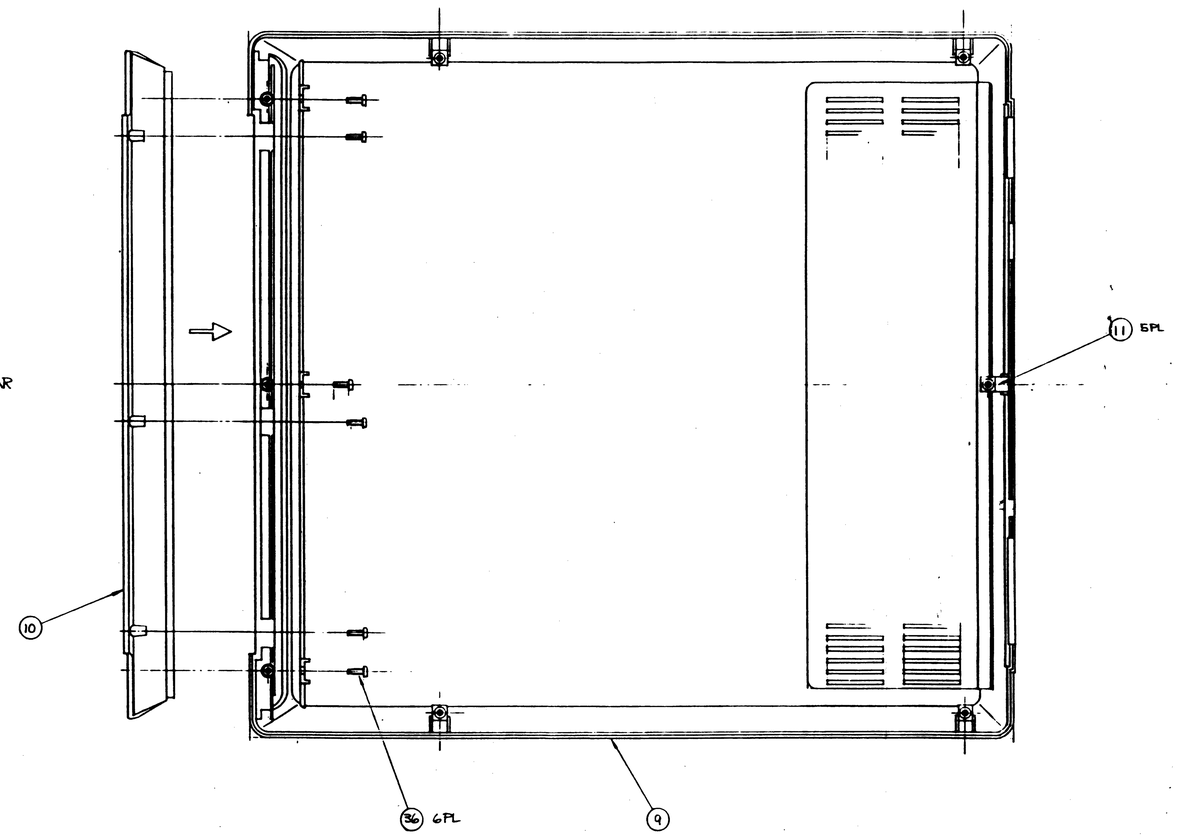

UNLESS OTHERWISE SPECIFIED TOLERANCES ON: DECIMALS .X ±.1 .XX ±.02 .XXX ±.005 ∠ ±2°	DRAWN BY K. Nishiyama DATE 4/8/83	commodore	
	CHKD	FINAL ASSY 8250LP	
	ENGR T. Gustine 5/11/83		
	APPR		
MATERIAL	USED ON 8250LP	NEXT ASSY 250203	SIZE D / 250603 / REV C
FINISH			SCALE NONE / SHEET 4 OF 4

THIRD ANGLE SYSTEM DIMENTION : mm AI 1320 : E 60 320-3350

REVISIONS				
LTR	ZONE	DESCRIPTION	DATE	APPROVED
		SEE SHEET 1		

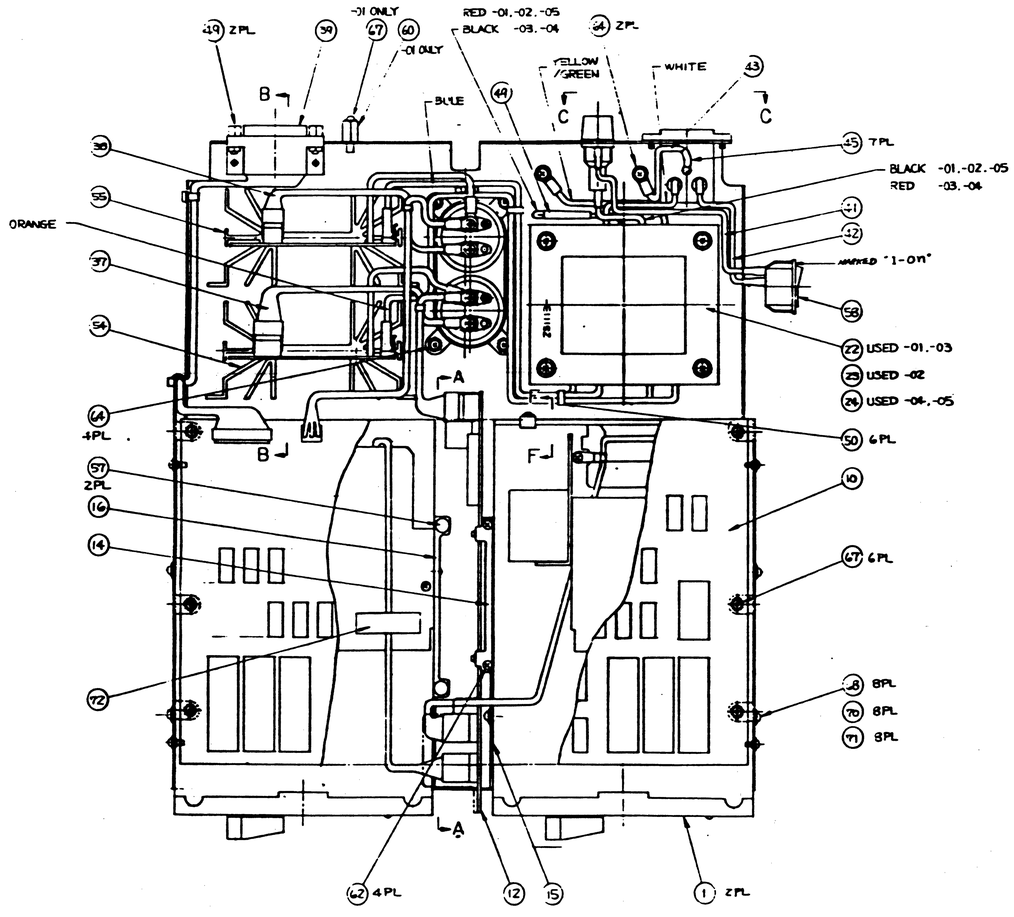

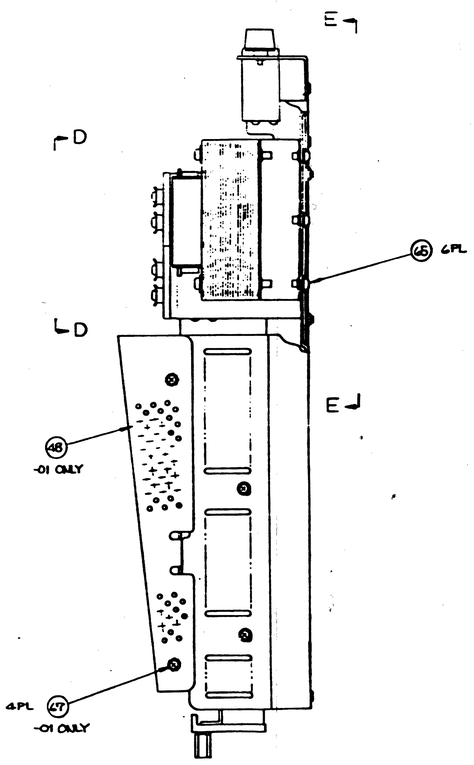

-01 THRU -05 SHOWN

UNLESS OTHERWISE SPECIFIED TOLERANCES ON DECIMALS .X ±.1 .XX ±.03 .XXX ±.005 ∠ ±1°	DRAWN BY	DATE	commodore
	CHKD		POWER SUPPLY ASSY
	ENGR		DUAL FLOPPY 8250LP
	APPD		
MATERIAL	USED ON 8250LP	NEXT ASSY	SIZE D 250406 REV
FINISH			SCALE SHEET

MICROBOX

REVISIONS				
LTR	ZONE	DESCRIPTION	DATE	APPROVED
		SEE SHEET 1		

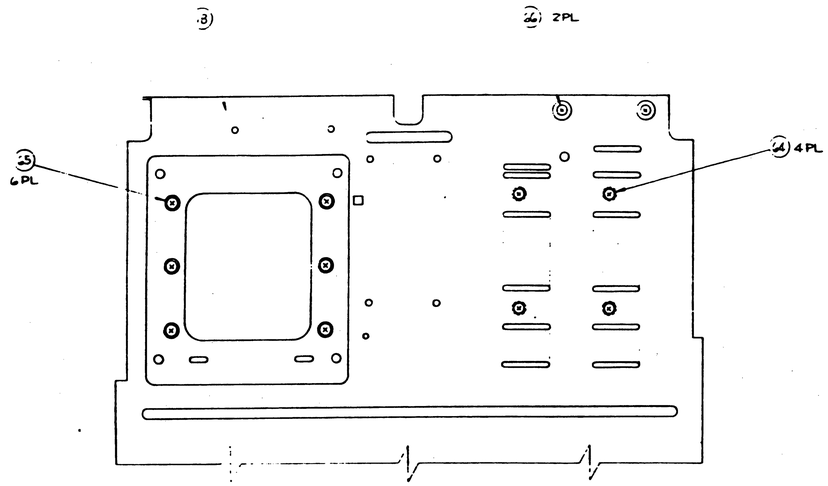

VIEW E-E

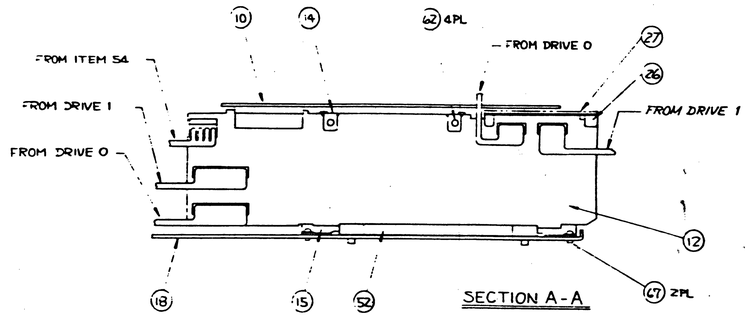

SECTION A-A

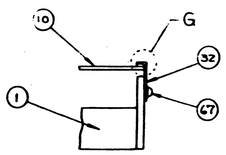

SECTION F-F

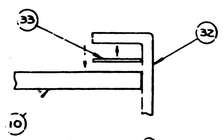

DETAILE G

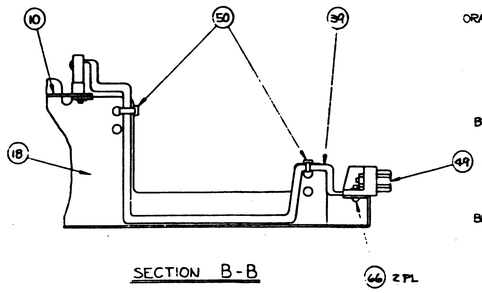

SECTION B-B

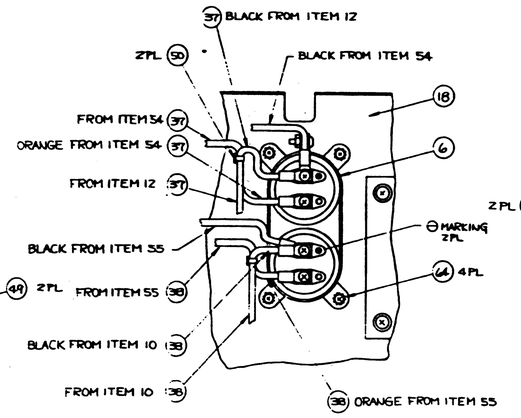

VIEW D-D

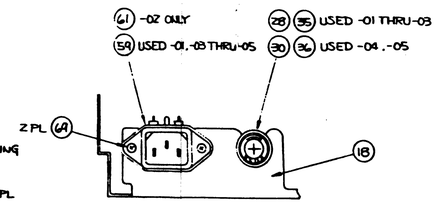

VIEW C-C

UNLESS OTHERWISE SPECIFIED TOLERANCES ON DECIMALS .X ±.02 .XX ±.005 .XXX ±.003 ∠ ±3°	DRAWN BY: K. Mitsumoto	DATE 3/26/81	commodore
	CHKD: T. Rizzuto	4/7/81	POWER SUPPLY ASSY
	ENGR: R. Shaulis	4/8/81	DUAL FLOPPY 8250LP
	APPR:		
MATERIAL:	USED ON: 8250LP	NEXT ASSY:	SIZE D 250606 REV C
FINISH:			SCALE NONE SHEET 5 OF 5

MICROBOX

PART NO	DESCRIPTION
250606-01	POWER SUPPLY ASSY. DUAL FLOPPY 8250LP UL
-02	CSA
-03	JIS
-04	VDE
250606-05	POWER SUPPLY ASSY. DUAL FLOPPY 8250LP BSI

符号	年月日	図面変更の概要	記印	検印
A	/ /	PRODUCTION RELEASE	T.T	
B	4/14/83	REVISED PER ECO 830137	T.T	
C	5/23/83	REVISED PER ECO 830226	[illegible]	
D	6/21/83	REVISED PER ECO 830254	[illegible]	
E	7/12/83	REVISED PER ECO 830327	[illegible]	
F	7/21/83	REVISED PER ECO 830356	[illegible]	
G	8/31/83	REVISED PER ECO 830401	[illegible]	
H	10-24-83	REVISED PER ECO 830428	[illegible]	
J	10-24-83	REVISED PER ECO 830432	[illegible]	

1. SHEET 4 & 5 OF 5 ARE D-SIZE ASSY DWG.

NOTES.

commodore	TITLE: POWER SUPPLY ASSY. DUAL FLOPPY 8250LP	DRAWN BY: T. Tokuda	DATE 12/20/82	[illegible]	DATE 3/1/83	SIZE B	250606	SHEET 1 OF 5
		CHKD: [illegible]	3/1/83	APPR:	/ /			

QUANTITY REQD PER PART/DASH NO. 05	04	03	02	01	ITEM	D. S.	PART NUMBER	DESCRIPTION	REF. DES	BEND	NOTES
2	2	2	2	2	1	B	251091-01	FLOPPY DRIVE 100TPI DOUBLE-SIDE			
S	S	S	S	S	2	B	251091-02	FLOPPY DRIVE 100TPI DOUBLE-SIDE			SUBSTITUTE FOR ITEM 1
					3						
					4						
					5						
1	1	1	1	1	6	B	251088-01	CAPACITOR UNIT			27000μF/25V + 27000μF/35V
					7						
					8						
					9						
1	1	1	1	1	10	B/C	250402-01	PCB ASSY. DIGITAL			MASK ROM VERSION
S	S	S	S	S	11	B/C	250402-02	PCB ASSY. DIGITAL			EP ROM VERSION
1	1	1	1	1	12	B	250404-01	PCB ASSY. ANALOG			
					13						
1	1	1	1	1	14	B	251128	METAL HOLDER, PCB			
1	1	1	1	1	15	B	251130	METAL ANGLE, RIGHT			
1	1	1	1	1	16	B	251129	METAL ANGLE, LEFT			
					17						
1	1	1	1	1	18	D	251140	SHASSIS POWER			
					19						
					20						
					21						
		1			22	B	251113-01	TRANSFORMER JIS			
		S	1	1	23	B	-02	UL, CSA, JIS			SUBSTITUTE FOR ITEM 22.
1	1				24	B	251113-03	TRANSFORMER. VDE, BSI			
					25						
					26						
					27						
		1	1	1	28	B	903614-01	FUSE HOLDER FH032			
					29						
1	1				30	B	903615-01	FUSE HOLDER FH033			
					31						
					32						
					33						
					34						
		1	1	1	35	B	903555-26	FUSE SLO BLO 250V 2A			6.3 DIA x 30
1	1				36	B	903558-11	FUSE SLO BLO 250V 1A			5.2 DIA x 20

commodore

TITLE: POWER SUPPLY ASSY. DUAL FLOPPY 8250LP

DRAWN BY:	DATE		DATE	SIZE		SHEET
T. Tokudo	12/20/82	J. Okubo	3/1/83	B	250606	2 OF 5
CHKD: R. Fukuma	3/1/83	APPR:	/ /			

QUANTITY REQD PER PART/DASH NO.					ITEM	D.S.	PART NUMBER	DESCRIPTION	REF. DES	BEND	NOTES
05	04	03	02	01							
1	1	1	1	1	37	B	251067	HARNESS ASSY. ANALOG			
1	1	1	1	1	38	B	251066	HARNESS ASSY. DIGITAL			
1	1	1	1	1	39	B	251090 -01	HARNESS ASSY. IEEE-488			
1	1	1	1	1	40	B	250677 -01	HARNESS ASSY FLAT CABLE			
1	1	1	1	1	41	B	200017-10	LEAD WIRE			BLACK 1015 AWG18 L=180 mm
1	1	1	1	1	42	B	200017-09	LEAD WIRE			BLACK 1015 AWG18 L=130 mm
1	1	1	1	1	43	B	1540010-03	GROUND CABLE ASSY			YELLOW/GREEN
					44						
7	7	7	7	7	45	B	905467-02	TUBING, SHRINCABLE			Ø5 x 20
1	1	1	1	1	46	B	905467-04	TUBING, SHRINCABLE			Ø4 x 40
					47						
				1	48	C	251142	SHIELD COVER, PCB			
2	2	2	2	2	49	B	905955-03	HARDWARE KIT VERTICAL MOUNT			W/O LOCKWASHER
6	6	6	6	6	50	B	251156-02	TIE CABLE			L=100 mm
					51						
1	1	1	1	1	52	B	251118-01	GUIDE PCB			
					53						
1	1	1	1	1	54	B	250613-01	HEAT SINK ASSY. ANALOG			+12V x 2
1	1	1	1	1	55	B	250613-02	HEAT SINK ASSY DIGITAL			+5V
			S		56	B	325552-02	FILTER POWER CONNECTOR			(TOKIN) GL-2030E-12 SUBSTITUTE FOR ITEM 61.
2	2	2	2	2	57	B	251131	RUBBER PCB			
1	1	1	1	1	58	B	904509-01	SWITCH ROCKER			
1	1	1		1	59	B	325552-01	FILTER POWER CONNECTOR			(TOKIN) GL-2030E
				1	60	B	1540040-02	STAND-OFF			L = 11 mm
			1		61	B	903350-01	POWER CONNECTOR			(HANAI PA-126)
4	4	4	4	4	62	B	906803 -01	SCREW FLAT HEAD M3-6			
4	4	4	4	4	63	B	325542 -04	SCREW PAN HEAD/EXT. TOOTH WASHER M4-10			
6	6	6	6	6	64	B	325542 -02	SCREW PAN HEAD/EXT. TOOTH WASHER M4-6			
6	6	6	6	6	65	B	325548 -03	SCREW PAN HEAD/EXT. SPRING WASHER M5-8			TO BE ATTACHED WITH TRANSFORMER.
2	2	2	2	2	66	B	906883 -01	SCREW SELF-TAPPING M3-8			
11	11	11	11	16	67	B	325541 -02	SCREW PAN HEAD/EXT. TOOTH WASHER M3-6			
8	8	8	8	8	68	B	906800 -02	SCREW PAN HEAD M3-10			
2	2	2	2	2	69	B	906803 -02	SCREW FLAT HEAD M3-8			
8	8	8	8	8	70	B	905661 -02	SPRING WASHER M3			
8	8	8	8	8	71	B	907272 -01	FLAT WASHER M3			
A/R	A/R	A/R	A/R	A/R	72	B	904905-03	MASKING TAPE 3/4 INCH WIDTH			BLACK 3M #217

commodore	TITLE: POWER SUPPLY ASS'Y. DUAL FLOPPY 8250LP	DRAWN BY: T. Tokuda	DATE 12/20/82		DATE 3/1/83	SIZE B	250606	SHEET 3 OF 5
		CHKD:	3/1/83	APPR:	/ /			

REVISIONS				
LTR	ZONE	DESCRIPTION	DATE	APPROVED
		SEE SHEET 1		

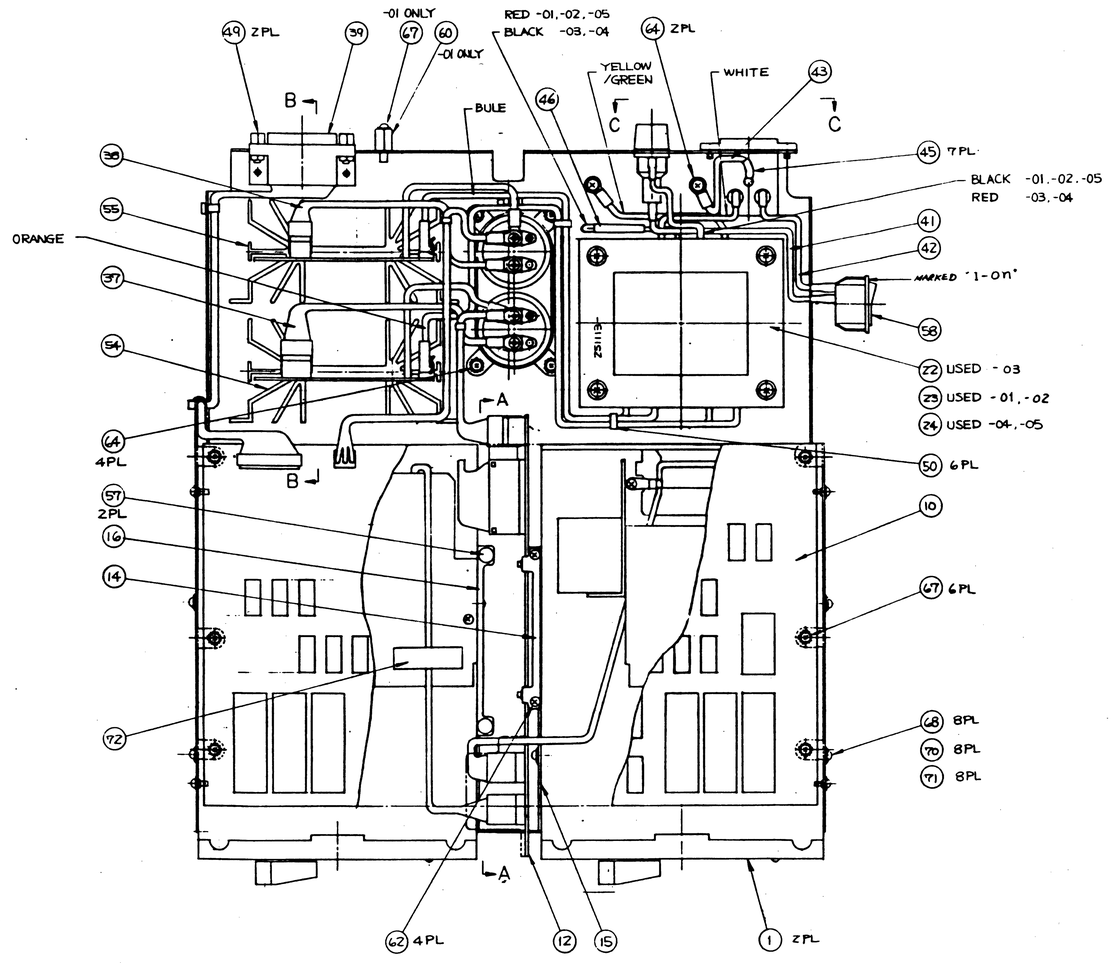

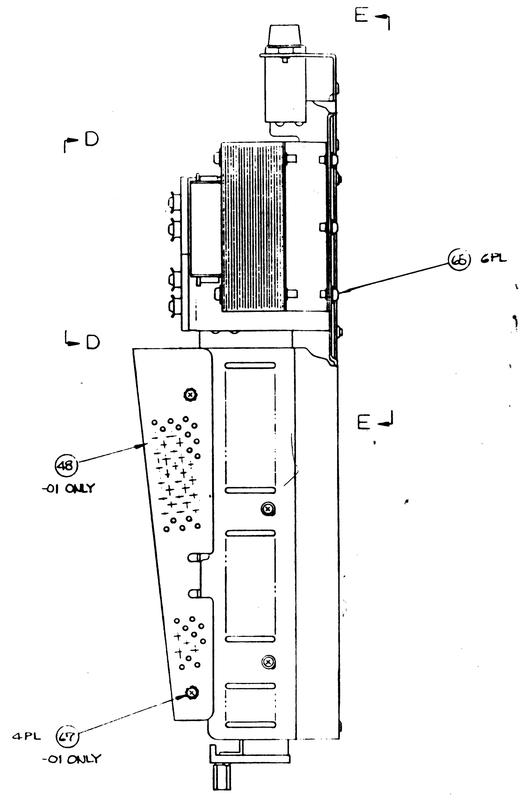

-01 THRU -05 SHOWN

UNLESS OTHERWISE SPECIFIED TOLERANCES ON: DECIMALS .X .XX .XXX ∠°	DRAWN BY: K. Wayne	DATE 3/31/83	commodore
	CHKD: T. Hinds	4/5/83	POWER SUPPLY ASSY DUAL FLOPPY 8250LP
	ENGR: A. Rodriguez	4/8/83	
	APPR:		
MATERIAL:	USED ON 8250LP	NEXT ASSY 250609	SIZE D 250606 REV J
FINISH:			SCALE NONE SHEET 4 OF 5

REVISIONS				
LTR	ZONE	DESCRIPTION	DATE	APPROVED
		SEE SHEET 1		

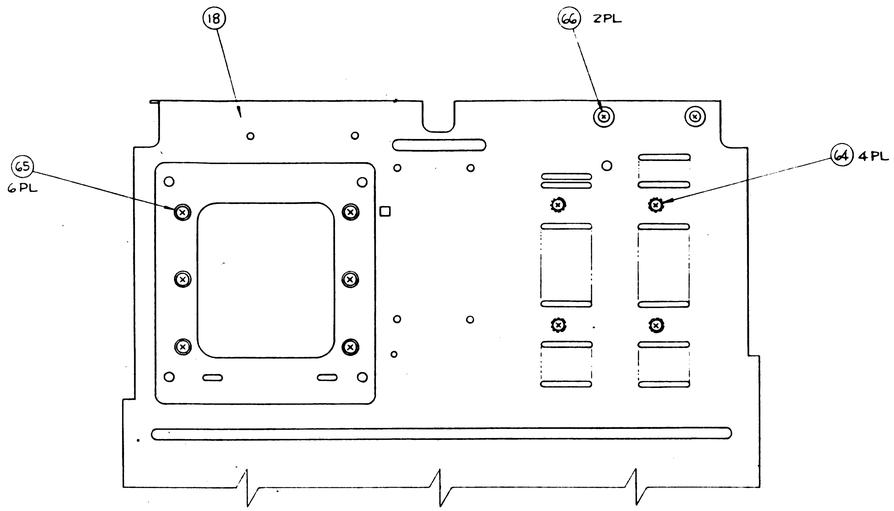

VIEW E-E

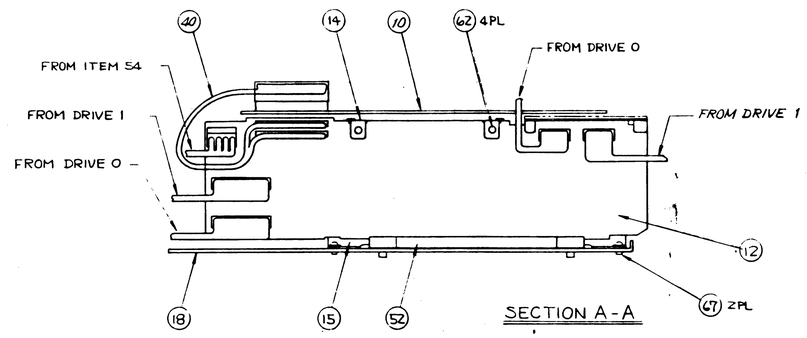

SECTION A-A

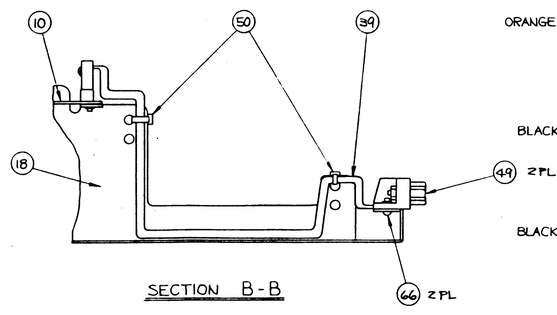

SECTION B-B

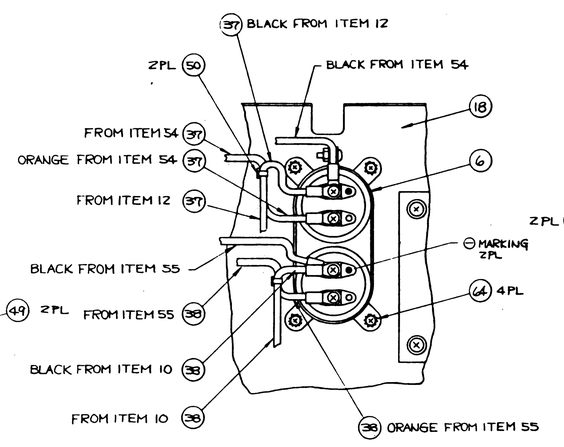

VIEW D-D

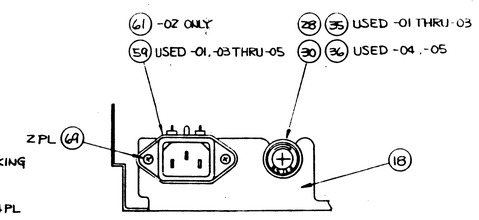

VIEW C-C

UNLESS OTHERWISE SPECIFIED TOLERANCES ON: DECIMALS .X ±, .XX ±, .XXX ±, ∠ ±	DRAWN BY: E. Matsuyama	DATE 3/30/83	commodore
	CHKD: T. Takeuchi	4/5/83	POWER SUPPLY ASSY DUAL FLOPPY 8250LP
	ENGR: [illegible]	4/8/83	
	APPR:		
MATERIAL:	USED ON 8250LP	NEXT ASSY 250609	SIZE D · 250606 · REV J
FINISH:			SCALE NONE · SHEET 5 OF 5

PART NO.	DESCRIPTION
250609-01	BASE ASSY. DUAL FLOPPY 8250LP UL
250609-02	CSA
250609-03	JIS
250609-04	VDE
250609-05	BASE ASSY. DUAL FLOPPY 8250LP BSI

	A	/ /	PRODUCTION RELEASE	T.T	
	B	4/14/83	REVISED PER ECO 830154		YO

1. SHEET 3 OF 3 IS D-SIZE ASSY DWG.

NOTES.

c b m ENGINEERING OSAKA JAPAN	TITLE: BASE ASSY. DUAL FLOPPY 8250LP	DRAWN BY: T. Takeuda	DATE 12 Oct 82		DATE 3/11/83	SIZE B	250609	SHEET 1 OF 3
		CHKD: R. Nishina	3/11/83	APPR:	/ /			

QUANTITY REQD PER PART/DASH NO. 05	04	03	02	01	ITEM	D. S.	PART NUMBER	DESCRIPTION	REF. DES	BEND	NOTES
				1	1	B/D	250606 -01	POWER SUPPLY ASSY. 8250LP UL			
			1		2		-02	CSA			
		1			3		-03	JIS			
	1				4		-04	VDE			
1					5	B/D	250606 -05	POWER SUPPLY ASSY. 8250LP BSI			
					6						
					7						
					8						
					9						
1	1	1	1	1	10	D	251141	CASE, BOTTOM			
					11						
					12						
					13						
					14						
6	6	6	6	6	15	B	325542 -03	SCREW PAN HEAD/EXT. TOOTH WASHER M4-8			
					16						
					17						
					18						
1	1	1	1	1	19	B	251133	PLATE SHIELD			
					20						
					21						
1	1	1	1	1	22	B	325541 - 02	SCREW PAN HEAD/EXT. TOOTH WASHER M3-6			
					23						
					24						
					25						
					26						
					27						
					28						
					29						
					30						
					31						
					32						
					33						
					34						
					35						
					36						

c b m ENGINEERING OSAKA JAPAN	TITLE: BASE ASSY. DUAL FLOPPY 8250LP	DRAWN BY: T. Tokuda	DATE 12/20/82	J. Okubo	DATE 3/1/83	SIZE B	250609	SHEET 2 OF 3
		CHKD: G. Guido	3/1/83	APPR:	/ /			

REVISIONS				
LTR	ZONE	DESCRIPTION	DATE	APPROVED
		SEE SHEET 1		

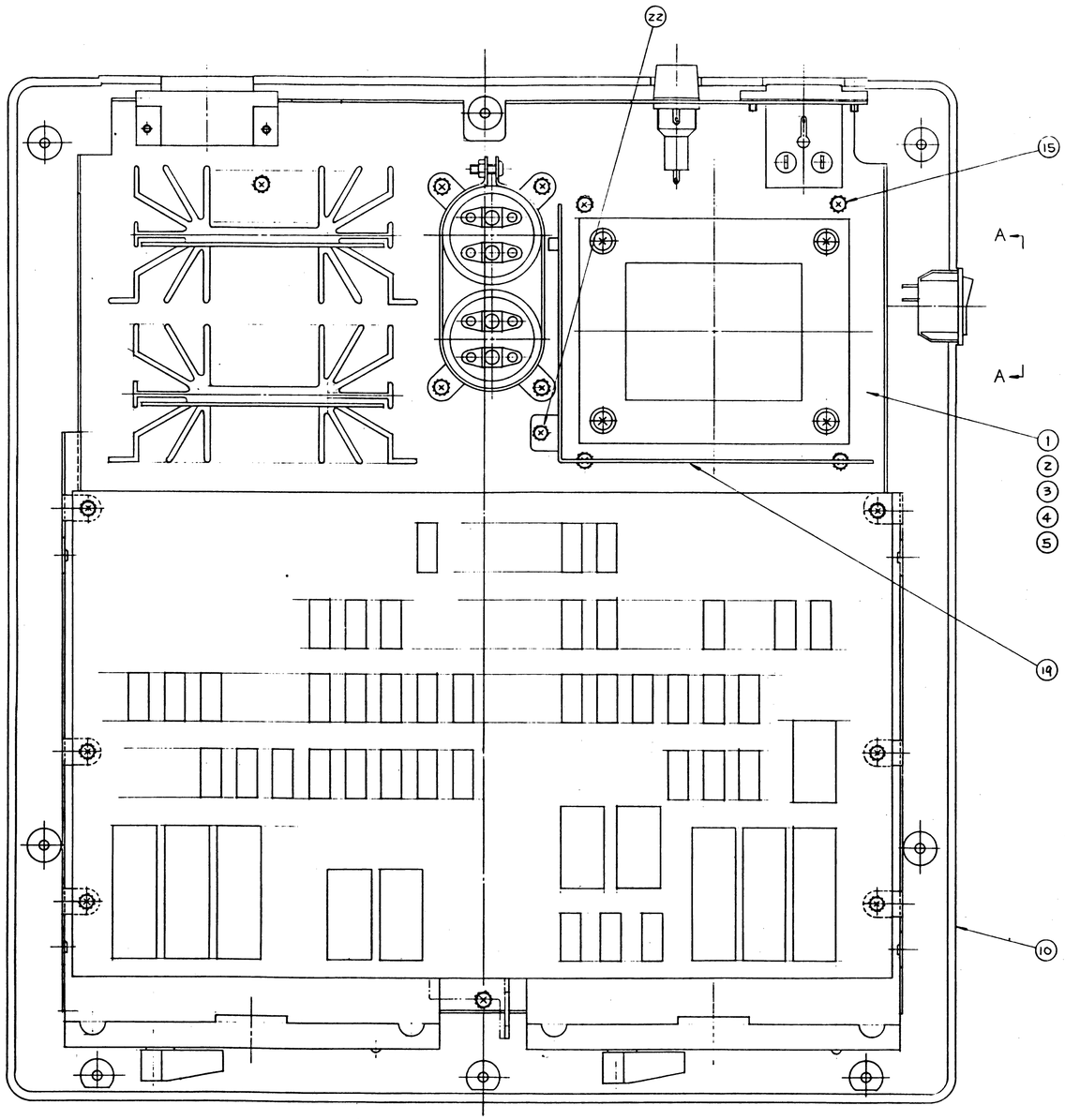

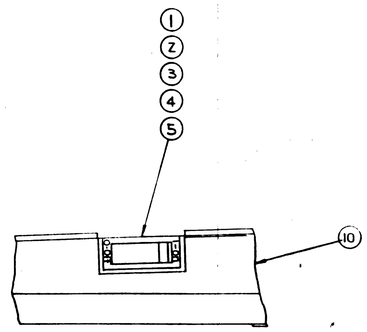

VIEW A-A

UNLESS OTHERWISE SPECIFIED TOLERANCES ON DECIMALS .X ± .XX ± .XXX ± ∠'S ±	DRAWN BY K. Monsman	DATE 4/1/82	commodore
	CHKD	4/1/82	BASE ASSY DUAL FLOPPY 8250LP
	ENGR	4/1/82	
	APPR	4/14/82	
MATERIAL	USED ON 8250LP	NEXT ASSY	SIZE D 250609 REV B
FINISH			SCALE 1:1 SHEET 3 OF 3

PART NO.	VENDOR	VENDOR PART NO.	DIMENSION	WEIGHT	POWER STANDBY	POWER OPERATING
251091 -01	MATSUSHITA	JU-570	145W×41.5H×213D	1.5(kg)	4 (W)	12 (W)
251091 -02	MATSUSHITA	JU-570-2	145W×41.5H×202D	1.5(kg)	4 (W)	12 (W)

REVISIONS				
LTR	ZONE	DESCRIPTION	DATE	APPROVED
A		PRODUCTION RELEASE	3-2-83	T. MATSUMOTO
B		REVISED PER ECO 830199	4-28-83	Y. Okada

1. SCOPE

THIS SPECIFICATION DESCRIBES A THIN MINI FLOPPY DISK DRIVE FOR USE IN COMPUTER SYSTEM.

2. GENERAL SPECIFICATION

a) CAPACITY (UNFORMATTED)

MEDIA 962.5K BYTE
TRACK 6.25 BYTE

b) DENSITY OF MEMORY (INSIDE)

5555 BPI

c) TRANSFER RATE

250 K BITS/SEC

d) ACCESS TIME

MOTOR START : 1 SEC
TRACK TO TRACK : 3 ms/TRACK
SETTLING : 15 ms
AVERAGE : 100 ms

e) ROTATIONAL SPEED

300 rpm

f) TRACK DENSITY

100 TPI

g) NUMBER OF TRACK

154 TRACKS

h) NUMBER OF HEAD

2 HEADS

3. ENVIRONMENT

a) TEMPERATURE

OPERATING 5 ~ 46°C
STORAGE -20 ~ 60°C

b) HUMIDITY

OPERATING 20 ~ 80% RH
STORAGE 8 ~ 90% RH (WITHOUT CONDENSATION)

4. POWER

a) DC +12V (±5%) 1.2A (MAX)
0.75A (TYP)

b) DC + 5V (±5%) 0.9A (MAX)
0.7A (TYP)

5. RELIABILITY

a) ERROR RATE

SOFT READ ERRORS 1×10^{-9} BIT
SEEK ERROS 1×10^{-6} SEEKS

b) MTBF 1×10^{4} HOURS

c) MEDIA LIFE 3.5×10^{6} PASSES PER TRACK
1×10^{7} PASSES PER SEEK

6. MOUNTING

FRONT LOADING : DISKETTE VERTICAL
DISKETTE HORISONTAL

UNLESS OTHERWISE SPECIFIED TOLERANCES ON: DECIMALS .X ± .XX ± .XXX ± ∠'S ±	DRAWN BY:	DATE 12/28/82
	CHKD: T. Takada	1/6/83
	ENGR:	
	APPR: T. MATSUMOTO	3/2/83

MATERIAL:
FINISH:

USED ON	NEXT ASSY
8250LP	
SFD-1001	

commodore

FLOPPY DISK DRIVE
100 TPI DOUBLE SIDED
MATSUSHITA

SIZE		REV
3	251091	B

SCALE NONE SHEET 1 OF 6

THIRD ANGLE SYSTEM. DIMENTION mm

REVISIONS				
LTR	ZONE	DESCRIPTION	DATE	APPROVED
		SEE SHEE 1		

7. HEAD

a) WRITE CURRENT 6.3mA P-P ± 0.2mA

b) ERASE CURRENT 40mA ± 5% DC

c) OUTPUT LOAD 6.2 KΩ

d). OUTPUT

TRK 00	1F	MAX	15mVPP
TRK 79	2F	MIN	1.3mVPP

e) RESOLUTION

TRK 00	MAX	99%
TRK.79	MIN	60%

8. STEPPING MOTOR

a). RATING VOLTAGE 12 V DC

b). OPERATING VOLTAGE 10.8 ~ 13.2 V DC

c) DRIVE MODE 2 PHASE

d). COILED IMPEDANCE 75Ω ± 7% PAR. PHASE

e). POSITIONING CONTROL

(---- IS OPEN)

TRACK NO.	SMD 1	SMD 3	SMD 2	SMD 4
4xn +0	GND	GND	----	----
4xn +1	----	GND	GND	----
4xn +2	----	----	GND	GND
4xn +3	GND	----	----	GND

•STEPPER-1,2 COMMON : +12V

•STEPPER-3,4 COMMON : +12V

9. SPINDLE MOTOR

a). RATING VOLTAGE 12 V DC

b). OPERATING VOLTAGE 10.8 ~ 13.2 V DC

c). LOADING 150g • cm

d). MOTOR SPEED 300 rpm

e). DRIVE CURRENT MAX 0.28 A (RATING TORQUE)
MAX 0.40 A (MAXIMUM TORQUE)

f). STARTING CURRENT MAX 1.2 A

g). STARTING TORQUE MIN 350 g-m (10.8V DC)

h) MAXMUM TORQUE MIN 310 g-m (10.8V DC)

i) STARTING TIME MAX 1.0 sec (THIS TIME IS UNTILL MAXMUM TORQUE)

j) LEAKAGE FLUX MAX 5 GAUSS

k). TURN ON VOLTAGE

ON	V_{IH}	0.8 V	MAX
OFF	V_{IL}	4.0 V	MIN

UNLESS OTHERWISE SPECIFIED TOLERANCES ON: DECIMALS .X ± .XX ± .XXX ± ∠'S ±	DRAWN BY: J. Yoshiyama	DATE 12/28/82	commodore
	CHKD: T. Tokuda	1/6/83	FLOPPY DISK DRIVE 100 TPI DOUBLE SIDED
	ENGR: [illegible]	[illegible]	MATSUSHITA
	APPR: T. MATSUMOTO	2/2/83	
MATERIAL:	USED ON 8250LP SFD-1001	NEXT ASSY	SIZE B 251091 REV B
FINISH:			SCALE NONE SHEET 2 OF 6

THIRD ANGLE SYSTEM DIMENTION mm

REVISIONS				
LTR	ZONE	DESCRIPTION	DATE	APPROVED
		SEE SHEET 1.		

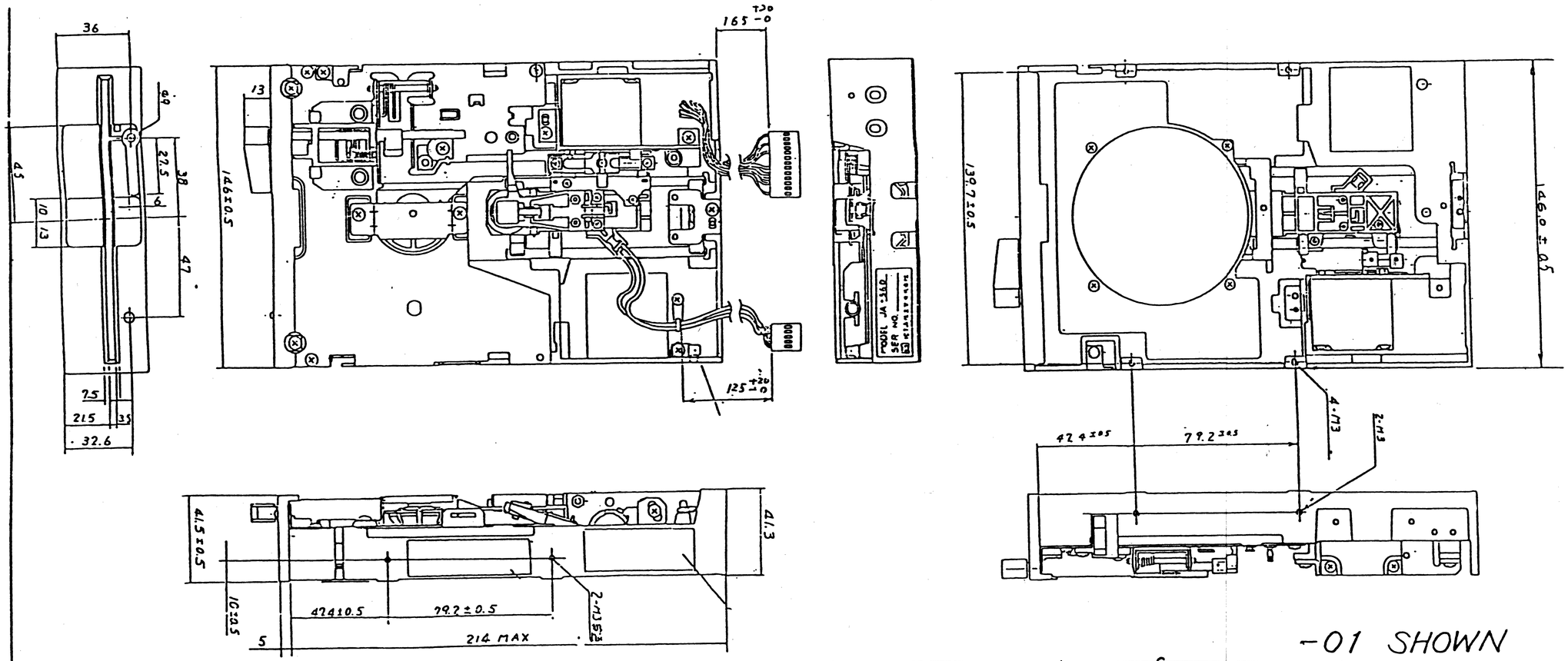

-01 SHOWN

UNLESS OTHERWISE SPECIFIED TOLERANCES ON: DECIMALS .X ± .XX ± .XXX ± ∠'S ±	DRAWN BY H. Nishizawa	DATE 12/28/82	commodore
	CHKD: T. Takeuchi	1/6/83	FLOPPY DISK DRIVE 100TPI DOUBLE SIDED MATSUSHITA
	ENGR: T. Takeuchi	2/28/83	
	APPR T. MATSUKUMA	3/3/83	
	R. Nishina	3/11/83	
MATERIAL: —	USED ON 8250LP SFD-1001	NEXT ASSY	SIZE B 251091 REV B
FINISH:			SCALE NONE SHEET 4 OF 6

THIRD ANGLE SYSTEM DIMENTION mm

REVISIONS				
LTR	ZONE	DESCRIPTION	DATE	APPROVED
		SEE SHEET 1		

PHYSICAL OUTLINE

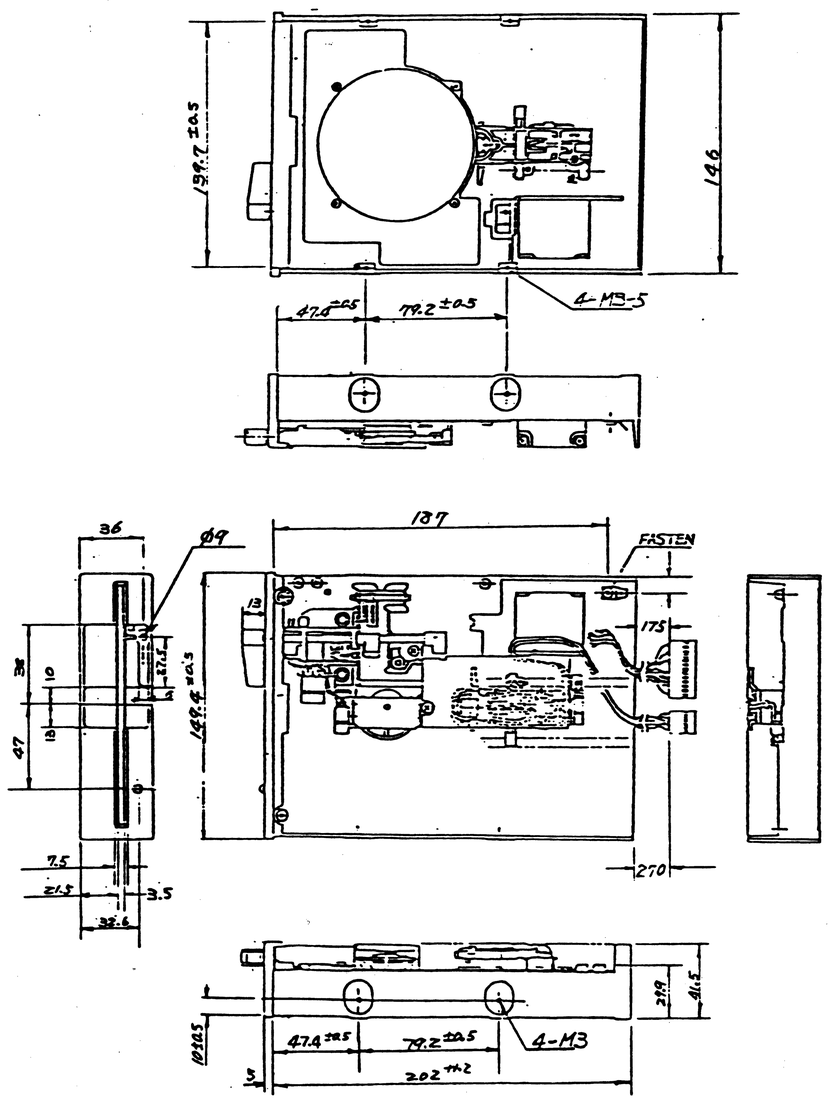

Fig. 12

-02 SHOWN

UNLESS OTHERWISE SPECIFIED TOLERANCES ON: DECIMALS .X ± .XX ± .XXX ± ∠'S ±	DRAWN BY: H. Nishiwaka	DATE 4/15/85	commodore
	CHKD: T. Tokuda	4/25/83	FLOPPY DISK DRIVE 100 TPI DOUBLE SIDED MATSUSHITA
	ENGR:		
	APPR:		
MATERIAL:	USED ON: S250LP SFD-1001	NEXT ASSY	SIZE B 251091 REV B
FINISH:			SCALE NONE SHEET 6 OF 6

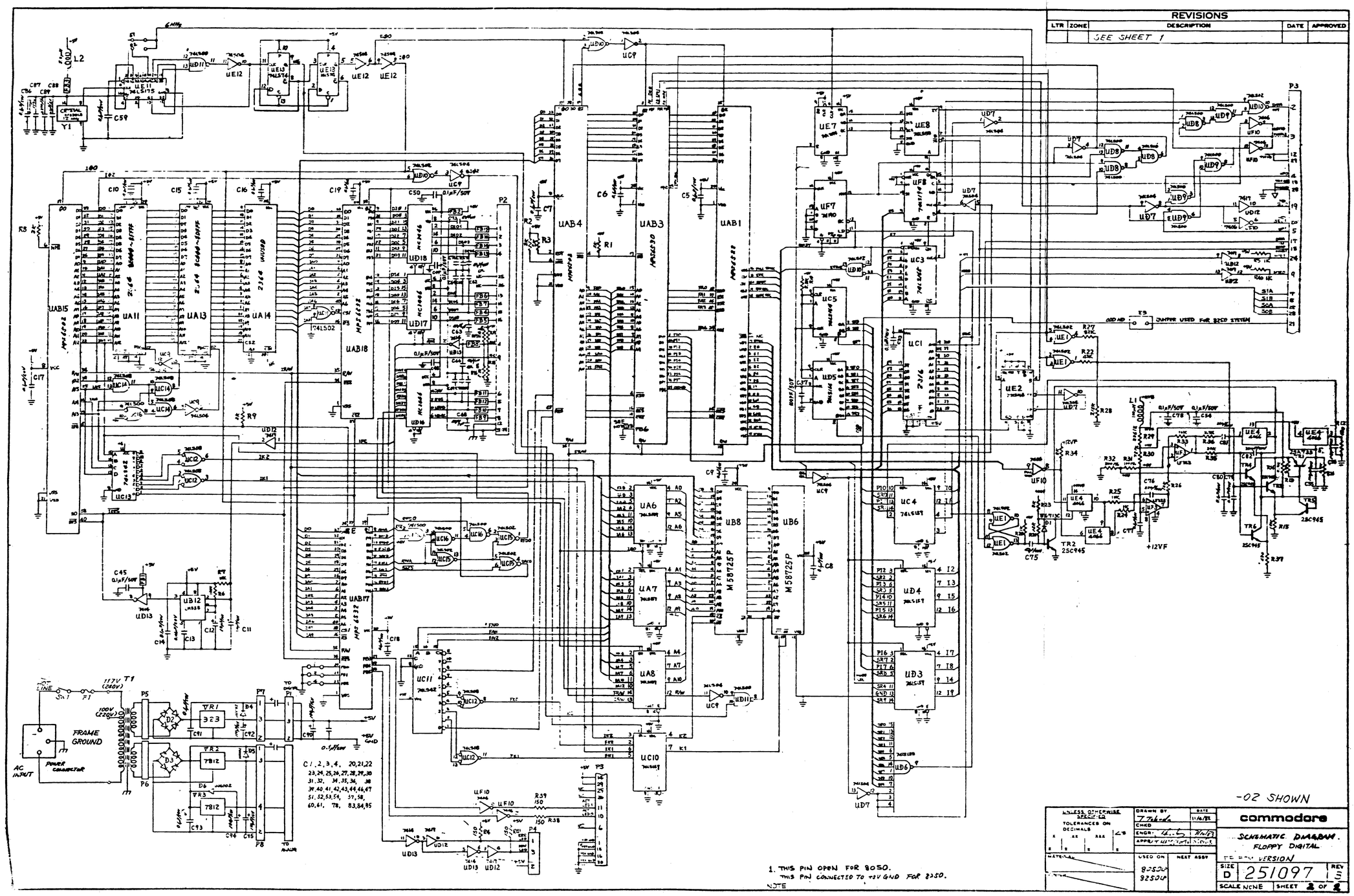
REVISIONS
LTR ZONE DESCRIPTION DATE APPROVED
SEE SHEET 1
JUMPER USED FOR 32CD SYSTEM
FRAME GROUND
AC INPUT
POWER CONNECTOR
117V (240V)
100V (220V)
C1, 2, 3, 4, 20, 21, 22
23, 24, 25, 26, 27, 28, 29, 30
31, 32, 34, 35, 36, 38
39, 40, 41, 42, 43, 44, 46, 47
51, 52, 53, 54, 57, 58,
60, 61, 78, 83, 84, 95
1. THIS PIN OPEN FOR 8050.
THIS PIN CONNECTED TO +5V GND FOR 8250.
NOTE
-02 SHOWN
commodore
SCHEMATIC DIAGRAM.
FLOPPY DIGITAL
TE BOW VERSION
SIZE D
251097
REV 5
SCALE NONE
SHEET 2 OF 4
8050U
8250U

COMMODORE BÜROMASCHINEN GmbH,

COMMODORE BÜROMASCHINEN GMBH
AUSLIEFERUNGSLAGER FRANKFURT
FRIEDRICH-SEELE-STRASSE 10
3300 Braunschweig, Tel.: (05 31) 895063-64

S E R V I C E - I N F O Januar 1984

8250 LP

COMMODORE - SERVICE

Diese Service - Info beinhaltet eine Zusammenstellung von Schaltplänen , Partnummern und eine Gegenüberstellung der alten 8250 zur 8250 LP , die Aufschluß über Testpunkte , bzw. noch zu verwendende Testprogramme gibt.

Im Anhang befindet sich eine Gesamtübersicht der in den FLOPPYs verwendeten ROMs.

Bodo Meier
(Service BS)

commodore

Stand: 7.12.83

Serviceinformation für Floppy 8250lp ("low profile")

Die Floppy 8250lp entspricht in ihrer logischen Funktion im wesentlichen dem zuletzt gebauten 8250-Modell mit MPI-Laufwerken, da für die Digitalkarte Schaltung und DOS übernommen wurden.

Die folgenden Bausteine auf den beiden Digitalplatten entsprechen einander (Unterschiede in Klammern):

8250lp (EPROM-Version)	8250 MPI
251166-01 UA13 } (EPROM 2564, 251165-01 UA11 } Pin 22 = $\overline{CS}$)	901887-01 UL1 } (ROM 2364, 901888-01 UH1 } Pin 20 = CS)
251167-01 UC1 (EPROM 2516, Pin 21 = +5 V)	901467-01 UK6 (ROM 6316, Pin 21 = 0 V)
Adapter 250414-02 UAB3 mit 251474-01A (EPROM 2716) und 901885-04 (PIA 6530) (Stepperzeitkonstante: 6 ms)	901869-01 UK3 (PIA 6530) (Stepperzeitkonstante: 10 ms)
2 RAMs 6116 UB6, UB8	8 RAMs 2114 UC4...UF4, UC5...UF5
4NPN Transistoren TR3...TR6 C1815 oder 2 SC945	Transistor array UP3 MPQ 2222

Folgende Testprogramme lassen sich für die 8250lp verwenden:

970004.g Softerrortest
970005.h Finaltest
970006.h PLL-Test
970035.g Systemtest
970101.a MPI-Adjust

Wegen der geänderten Digital- und Analogplatte und der neuen Laufwerke der Firma MATSUSHITA sind dabei folgende Hinweise zu beachten:

970006.h: UN3/Pin 7 entspricht UF3/Pin 7

970101.a:
Step 1: Türschalter nicht vorhanden

Step 3: Einstellen der Geschwindigkeit nur nach Ausbau des Montagechassis möglich:
Trafo-Abschirmblech entfernen, 6 Kreuzschlitzschrauben lösen (4 Stück beim Trafo, 1 am IEEE-Stecker, 1 vorn zwischen den Laufwerken), Chassis nach vorn schieben und hochheben.

Schraubenzieher mit 1,5 mm Breite, für Laufwerk 1 ist ein Winkelschraubenzieher erforderlich.
Belt check nicht erforderlich, da Direktantrieb.

Step 4 und 6: TP1/TP2 entspricht Pin 14/15 von 2B auf der Analogplatte (zwischen den Laufwerken, 2. IC von vorn). Testpunkte sind leider nicht vorhanden.
UM5/Pin 9 entspricht UD6/Pin 9 auf der Digitalkarte (unter der Adapterkarte).

Step 5: Testdauer ca. 5 sec statt 10 sec.

Step 6: UK3/Pin 40 entspricht UAB3/Pin 40.
Falls kein Kommando vom Programm angenommen wird und die LED am Laufwerk konstant leuchtet, ist der Sync-Impuls auf der verwendeten Alignmentdiskette nicht einwandfrei oder der Lesekopf außerhalb des Bereiches Spur 20 bis 45.

Einstellen des Alignments:
Digitalplatte entfernen (7 Kreuzschlitzschrauben) und neben die Floppy legen, Verbindung zur Analogplatte verlängern. Einstellen durch Lösen der beiden von oben zugänglichen Kreuzschlitzschrauben am Halteblech des Steppermotors und vor- bzw. zurückschieben des Steppermotors je nach Aussehen der "cateyes" auf dem Scope; danach wieder festziehen.

Step 7: Die Stopeinstellung erfolgt durch Lösen der von rechts zugänglichen Kreuzschlitzschraube im Halteblech des Steppermotors und Verschieben des Anschlagbleches. Danach die Schraube wieder festziehen. Die Lichtschranke für das Spur-1-Signal ist nicht angeschlossen (Analogboard geändert, entspricht Schaltung 251127 Rev C).

Die zur Zeit gültigen Schaltunterlagen:

Digital: 251097 Rev B (Blatt 1: ROM-Version,
Blatt 2: EPROM-Version)

Analog: 251127 Rev C

Ältere Version:

Digital: UAB3 = 901885-04 (PIA 6530)

Analog: 251127 Rev B (Spur-1-Lichtschranke angeschlossen)

Gerald Arndt
CBM BSW